SPLIT-TYPE ROOM AIR CONDITIONER

Installation & Owner's Manual

ATLAS SINGLE ZONE DAP-SERIES
TITAN SINGLE ZONE DTS-SERIES

IMPORTANT NOTE:

Read this manual carefully before installing or operating your new air conditioning unit. Make sure to save this manual for future reference.

Dial® HVAC

CONTENTS

Operation Instructions

Safety Precautions 02
Get to Know Your AC 13
More Features 14
Setting Angle of Air Flow 15
Manual Operation (without remote) 16
Care and Maintenance 17
Troubleshooting 19

Safety Precautions

It is really important that you read Safety Precautions Before Operation and Installation. Incorrect installation due to ignoring instructions can cause serious damage or injury. The seriousness of potential damage or injuries is classified as either a WARNING or CAUTION.

Explanation of Symbols

WARNING

This symbol indicates the possibility of personnel injury or loss of life.

CAUTION

This symbol indicates the possibility of property damage or serious consequences.

⚠ WARNING

This appliance is not intended for use by persons (including children) with reduced physical, sensory or mental capabilities, or lack of experience and knowledge, unless they have been given supervision or instruction concerning use of the appliance by a person responsible for their safety. Children should be supervised to ensure that they do not play with the appliance.

⚠ WARNING FOR PRODUCT USE

- Turn off the air conditioner and disconnect the power before performing any cleaning, installation or repairing. Failure to do so can cause electric shock.
- If an abnormal situation arises (like a burning smell), immediately turn off the unit and disconnect the power. Call your dealer for instructions to avoid electric shock, fire or injury.
- Do not insert fingers, rods or other objects into the air inlet or outlet. This may cause injury, since the fan may be rotating at high speeds.
- Do not use flammable sprays such as hair spray, lacquer or paint near the unit. This may cause fire or combustion.
- Do not operate the air conditioner in places near or around combustible gases. Emitted gas may collect around the unit and cause explosion.
- Do not operate your air conditioner in a wet room such as a bathroom or laundry room. Too much exposure to water can cause electrical components to short circuit.
- Do not expose your body directly to cool air for a prolonged period of time.
- Do not allow children to play with the air conditioner. Children must be supervised around the unit at all times.
- If the air conditioner is used together with burners or other heating devices, thoroughly ventilate the room to avoid oxygen deficiency.
- In certain functional environments, such as kitchens, server rooms, etc., the use of specially designed air-conditioning units is highly recommended.

⚠ ELECTRICAL WARNINGS

- Only use the specified wire. If the wire is damaged, it must be replaced by the manufacturer, its service agent or similarly qualified persons in order to avoid a hazard.
- The product must be properly grounded at the time of installation, or electric shock may occur.
- For all electrical work, follow all local and national wiring standards, regulations, and the Installation Manual. Connect cables tightly, and clamp them securely to prevent external forces from damaging the terminal. Improper electrical connections can overheat and cause fire, and may also cause shock. All electrical connections must be made according to the Electrical Connection Diagram located on the panels of the indoor and outdoor units.
- All wiring must be properly arranged to ensure that the control board cover can close properly. If the control board cover is not closed properly, it can lead to corrosion and cause the connection points on the terminal to heat up, catch fire, or cause electric shock.
- Disconnection must be incorporated in the fixed wiring in accordance with the wiring rules.
- Do not share the electrical outlet with other appliances. Improper or insufficient power supply can cause fire or electric shock.
- If connecting power to fixed wiring, an all-pole disconnection device which must be incorporated in the fixed wiring in accordance with the wiring rules.

CLEANING AND MAINTENANCE WARNINGS

- Turn off the device and disconnect the power before cleaning. Failure to do so can cause electric shock.
- Do not clean the air conditioner with excessive amounts of water.
- Do not clean the air conditioner with combustible cleaning agents. Combustible cleaning agents can cause fire or deformation.

⚠ CAUTION

- Turn off the air conditioner and disconnect the power if you are not going to use it for a long time.
- Turn off and unplug the unit during storms.
- Make sure that water condensation can drain unhindered from the unit.
- Do not operate the air conditioner with wet hands. This may cause electric shock.
- Do not use device for any other purpose than its intended use.
- Do not climb onto or place objects on top of the outdoor unit.
- Do not allow the air conditioner to operate for long periods of time with doors or windows open, or if the humidity is very high.

⚠ WARNING FOR USING FLAMMABLE REFRIGERANTS

- Do not use means to accelerate the defrosting process or to clean, other than those recommended by the manufacturer.
- The appliance shall be stored in a room without continuously operating ignition sources (for example: open flames, an operating gas appliance or an operating electric heater).

- Do not pierce or burn.
- Be aware that refrigerants may not contain an odour.
- LEAK DETECTION SYSTEM installed. Unit must be powered except for service. When the refrigerant sensor detects refrigerant leakage, the indoor unit will display an error code and emit a buzzing sound, the compressor of outdoor unit will immediately stop, and the indoor fan will start running. The service life of the refrigerant sensor is 15 years. When the refrigerant sensor malfunctions, the indoor unit will display the error code “FHCC”. The refrigerant sensor cannot be repaired and can only be replaced by the manufacturer. It shall only be replaced with the sensor specified by the manufacturer. (Applicable to the units with refrigerant sensors only)

For R454B refrigerant charge amount and minimum room area:

The machine you purchased may be one of the types in the table below. The indoor and outdoor units are designed to be used together. Please check the machine you purchased. The indoor unit should be installed at least 6.0ft /1.8m above from the floor, the height of the room cannot be less than 7.3ft /2.2m, and the minimum room area of operating or storage should be as specified in the following table.

A_{min} [ft²/m²]	**h_{inst}[ft/m]**					
m_c or m_{REL} [oz/kg]	6.0～7.3/ 1.8～2.2	7.6/2.3	7.9/2.4	8.6/2.6	9.2/2.8	9.9/3.0
<=62.6/1.776	12/1.10					
63.4/1.8	60/5.53	57/5.29	55/5.07	51/4.68	47/4.35	44/4.06
70.5/2.0	67/6.15	64/5.88	61/5.64	56/5.2	52/4.83	49/4.51
77.5/2.2	73/6.76	70/6.47	67/6.2	62/5.72	58/5.31	54/4.96
84.6/2.4	80/7.38	76/7.06	73/6.76	68/6.24	63/5.8	59/5.41
91.7/2.6	86/7.99	83/7.64	79/7.32	73/6.76	68/6.28	64/5.86
98.7/2.8	93/8.6	89/8.23	85/7.89	79/7.28	73/6.76	68/6.31
105.8/3.0	100/9.22	95/8.82	91/8.45	84/7.8	78/7.24	73/6.76
112.8/3.2	106/9.83	102/9.41	97/9.01	90/8.32	84/7.73	78/7.21
119.9/3.4	113/10.45	108/9.99	104/9.58	96/8.84	89/8.21	83/7.66
126.9/3.6	120/11.06	114/10.58	110/10.14	101/9.36	94/8.69	88/8.11
134/3.8	126/11.68	121/11.17	116/10.7	107/9.88	99/9.17	93/8.56
141.1/4.0	133/12.29	127/11.76	122/11.27	112/10.4	104/9.66	97/9.01
148.1/4.2	139/12.9	133/12.34	128/11.83	118/10.92	110/10.14	102/9.46
155.1/4.4	146/13.52	140/12.93	134/12.39	124/11.44	115/10.62	107/9.91
162.2/4.6	153/14.13	146/13.52	140/12.96	129/11.96	120/11.11	112/10.37
169.2/4.8	159/14.75	152/14.11	146/13.52	135/12.48	125/11.59	117/10.82
176.3/5.0	166/15.36	159/14.69	152/14.08	140/13	130/12.07	122/11.27
Area formula	**A_{min}** is the required minimum room area in ft²/m² **m_c** is the actual refrigerant charge in the system in oz/kg **m_{REL}** is the refrigerant releasable charge in oz/kg (Applicable to the units with refrigerant sensors only) **h_{inst}** is the height of the bottom of the appliance relative to the floor of the room after installation. **WARNING:** The minimum room area or minimum room area of conditioned space is based on releasable charge and total system refrigerant charge.					

For the units with refrigerant sensors, when the unit detects a refrigerant leak, the minimum airflow of the indoor unit is as follows:

Hyper Heat Series

Model	Indoor unit	Outdoor unit	Indoor nominal air volume	
06K	DAP06W2A1	/	400m³/h	235CFM
09K	DAP09W2A1	DAP091H2A1	500m³/h	295CFM
12K	DAP12W2A1	DAP121H2A1	500m³/h	295CFM
18K	DAP18W2A1	DAP181H2A1	850m³/h	500CFM
24K	DAP24W2A1	DAP241H2A1	1000m³/h	590CFM
33K	DAP33W2A1	DAP331H2A1	1150m³/h	675CFM

The information in the following table is only applicable to models without refrigerant sensors:

Entry Tier Series

Model	Indoor unit	Outdoor unit
09K(115V)	DTS09W1A1	DTS091H1A1
09K	DTS09W2A1	DTS091H2A1
12K(115V)	DTS12W1A1	DTS121H1A1
12K	DTS12W2A1	DTS121H2A1
18K	DTS18W2A1	DTS181H2A1
24K	DTS24W2A1	DTS241H2A1

1. Installation (where refrigerant pipes are allowed)
   - Any person who is involved with working on or breaking into a refrigerant circuit should hold a current valid certificate from an industry-accredited assessment authority, which authorizes their competence to handle refrigerants safely in accordance with an industry recognized assessment specification.
   - Maintenance and repair requiring the assistance of other skilled personnel shall be carried out under the supervision of the person competent in the use of flammable refrigerants.
   - That the installation of pipe-work shall be kept to a minimum.
   - That pipe-work shall be protected from physical damage.
   - Where refrigerant pipes shall be compliance with national gas regulations.
   - That mechanical connections shall be accessible for maintenance purposes.
   - Be more careful that foreign matter(oil, water, etc.) does not enter the piping. Also, when storing the piping, securely seal the opening by pinching, taping, etc.
   - Appliance shall be stored in a well-ventilated area where the room size corresponds to the room area as specific for operation.
   - Joints shall be tested with detection equipment with a capability of 5 g/year of refrigerant or better, with the equipment in standstill and under operation or under a pressure of at least these standstill or operation conditions after installation. Detachable joints shall NOT be used in the indoor side of the unit (brazed, welded joint could be used).
   - In cases that require mechanical ventilation, ventilation openings shall be kept clear of obstruction.

2. When a FLAMMABLE REFRIGERANT is used, the requirements for installation space of appliance and /or ventilation requirements are determined according to
   - the mass charge amount(M) used in the appliance,
   - the installation location,
   - the type of ventilation of the location or of the appliance.
   - piping material, pipe routing, and installation shall include protection from physical damage in operation and service, and be in compliance with national and local codes and standards, such as ASHRAE 15, IAPMO Uniform Mechanical Code, ICC International Mechanical Code, or CSA B52. All field joints shall be accessible for inspection prior to being covered or enclosed.
   - that protection devices, piping, and fittings shall be protected as far as possible against adverse environmental effects, for example, the danger of water collecting and freezing in relief pipes or the accumulation of dirt and debris;
   - that piping in refrigeration systems shall be so designed and installed to minimize the likelihood of hydraulic shock damaging the system;
   - that steel pipes and components shall be protected against corrosion with a rustproof coating before applying any insulation;
   - that precautions shall be taken to avoid excessive vibration or pulsation;
   - the minimum floor area of the room shall be mentioned in the form of a table or a single figure without reference to a formula;
   - after completion of field piping for split systems, the field pipework shall be pressure tested with an inert gas and then vacuum tested prior to refrigerant charging, according to the following requirements:

a. The minimum test pressure for the low side of the system shall be the low side design pressure and the minimum test pressure for the high side of the system shall be the high side design pressure, unless the high side of the system can not be isolated from the low side of the system in which case the entire system shall be pressure tested to the low side design pressure.

b. The test pressure after removal of pressure source shall be maintained for at least 1 h with no decrease of pressure indicated by the test gauge, with test gauge resolution not exceeding 5% of the test pressure.

c. During the evacuation test, after achieving a vacuum level specified in the manual or less, the refrigeration system shall be isolated from the vacuum pump and the pressure shall not rise above 1500 microns within 10 min. The vacuum pressure level shall be specified in the manual, and shall be the lessor of 500 microns or the value required for compliance with national and local codes and standards, which may vary between residential, commercial and industrial buildings.

-- field-made refrigerant joints indoors shall be tightness tested according to the following requirements: The test method shall have a sensitivity of 5 grams per year of refrigerant or better under a pressure of at least 0,25 times the maximum allowable pressure. No leak shall be detected.

-- Any servicing shall be performed only as recommended by the manufacturer.

3. Qualification of workers
   Any maintenance, service and repair operations must be required qualification of the working personnel. Every working procedure that affects safety means shall only be carried out by competent persons that joined the training and achieved competence should be documented by a certificate. The training of these procedures is carried out by national training organizations or manufacturers that are accredited to teach the relevant national competency standards that may be set in legislation. All training shall follow the ANNEX HH requirements of UL 60335-2-40 4th Edition.
   Examples for such working procedures are:
   • breaking into the refrigerating circuit;
   • opening of sealed components;
   • opening of ventilated enclosures.

Information Servicing

1. Checks to the area

Prior to beginning work on systems containing flammable refrigerants, safety checks are necessary to ensure that the risk of ignition is minimised. For repair to the refrigerating system, the following precautions shall be complied with prior to conducting work on the system.

2. Work procedure

Works shall be undertaken under a controlled procedure so as to minimise the risk of a flammable gas or vapour being present while the work is being performed.

3. General work area

All maintenance staff and others working in the local area shall be instructed on the nature of work being carried out. Work in confined spaces shall be avoided.

4. Checking for presence of refrigerant

The area shall be checked with an appropriate refrigerant detector prior to and during work, to ensure the technician is aware of potentially flammable atmospheres. Ensure that the leak detection equipment being used is suitable for use with flammable refrigerants, i.e., no sparking, adequately sealed or intrinsically safe.

5. Presence of fire extinguisher

If any hot work is to be conducted on the refrigeration equipment or any associated parts, appropriate fire extinguishing equipment shall be available to hand. Have a dry powder or CO_2 fire extinguisher adjacent to the charging area.

6. No ignition sources
No person carrying out work in relation to a REFRIGERATING SYSTEM which involves exposing any pipe work shall use any sources of ignition in such a manner that it may lead to the risk of fire or explosion. All possible ignition sources, including cigarette smoking, should be kept sufficiently far away from the site of installation, repairing, removing and disposal, during which refrigerant can possibly be released to the surrounding space. Prior to work taking place, the area around the equipment is to be surveyed to make sure that there are no flammable hazards or ignition risks. “No Smoking” signs shall be displayed.

7. Ventilated area
Ensure that the area is in the open or that it is adequately ventilated before breaking into the system or conducting any hot work. A degree of ventilation shall continue during the period that the work is carried out. The ventilation should safely disperse any released refrigerant and preferably expel it externally into the atmosphere.

8. Checks to the refrigeration equipment
Where electrical components are being changed, they shall be fit for the purpose and to the correct specification. At all times the manufacturer’s maintenance and service guidelines shall be followed. If in doubt consult the manufacturer’s technical department for assistance. The following checks shall be applied to installations using FLAMMABLE REFRIGERANTS:

- the actual refrigerant charge is in accordance with the room size within which the refrigerant containing parts are installed;
- the ventilation machinery and outlets are operating adequately and are not obstructed;
- if an indirect refrigerating circuit is being used, the secondary circuits shall be checked for the presence of refrigerant;
- marking to the equipment continues to be visible and legible, marking and signs that are illegible shall be corrected;
- refrigeration pipe or components are installed in a position where they are unlikely to be exposed to any substance which may corrode refrigerant containing components, unless the components are constructed of materials which are inherently resistant to being corroded or are suitably protected against being so corroded.

9. Checks to electrical devices
Repair and maintenance to electrical components shall include initial safety checks and component inspection procedures. If a fault exists that could compromise safety, then no electrical supply shall be connected to the circuit until it is satisfactorily dealt with. If the fault cannot be corrected immediately but it is necessary to continue operation, and adequate temporary solution shall be used. This shall be reported to the owner of the equipment so all parties are advised.
Initial safety checks shall include:

- that capacitors are discharged: this shall be done in a safe manner to avoid possibility of sparking;
- that there no live electrical components and wiring are exposed while charging, recovering or purging the system;
- that there is continuity of earth bonding.

10. Sealed electrical components shall be replaced.

11. Intrinsically safe components must be replaced.

12. Cabling

Check that cabling will not be subject to wear, corrosion, excessive pressure, vibration, sharp edges or any other adverse environmental effects. The check shall also take into account the effects of aging or continual vibration from sources such as compressors or fans.

13. Detection of flammable refrigerants

Under no circumstances shall potentially sources of ignition be used in the searching for or detection of refrigerant leaks. A halide torch (or any other detector using a naked flame) shall not be used.

The following leak detection methods are deemed acceptable for refrigerant systems. Electronic leak detectors may be used to detect refrigerant leaks but, in the case of FLAMMABLE REFRIGERANTS, the sensitivity may not be adequate, or may need re-calibration. (Detection equipment shall be calibrated in a refrigerant-free area.) Ensure that the detector is not a potential source of ignition and is suitable for the refrigerant used. Leak detection equipment shall be set at a percentage of the LFL of the refrigerant and shall be calibrated to the refrigerant employed, and the appropriate percentage of gas (25 % maximum) is confirmed.

Leak detection fluids are also suitable for use with most refrigerants but the use of detergents containing chlorine shall be avoided as the chlorine may react with the refrigerant and corrode the copper pipe-work.

NOTE Examples of leak detection fluids are

- bubble method,
- fluorescent method agents.

If a leak is suspected, all naked flames shall be removed/extinguished.

If a leakage of refrigerant is found which requires brazing, all of the refrigerant shall be recovered from the system, or isolated (by means of shut off valves) in a part of the system remote from the leak. See the following instructions of removal of refrigerant.

14. Removal and evacuation

When breaking into the refrigerant circuit to make repairs - or for any other purpose conventional procedures shall be used. However, for flammable refrigerants it is important that best practice be followed, since flammability is a consideration.

The following procedure shall be adhered to:

- safely remove refrigerant following local and national regulations;
- evacuate;
- purge the circuit with inert gas (optional for A2L);
- evacuate (optional for A2L);
- continuously flush or purge with inert gas when using flame to open circuit; and
- open the circuit

The refrigerant charge shall be recovered into the correct recovery cylinders if venting is not allowed by local and national codes. For appliances containing flammable refrigerants, the system shall be purged with oxygen-free nitrogen to render the appliance safe for flammable refrigerants. This process might need to be repeated several times. Compressed air or oxygen shall not be used for purging refrigerant systems.

For appliances containing flammable refrigerants, refrigerants purging shall be achieved by breaking the vacuum in the system with oxygen-free nitrogen and continuing to fill until the working pressure is achieved, then venting to atmosphere, and finally pulling down to a vacuum (optional for A2L). This process shall be repeated until no refrigerant is within the system (optional for A2L). When the final oxygen-free nitrogen charge is used, the system shall be vented down to atmospheric pressure to enable work to take place.

The outlet for the vacuum pump shall not be close to any potential ignition sources, and ventilation shall be available.

15. Charging procedures

In addition to conventional charging procedures, the following requirements shall be followed:

- Works shall be undertaken with appropriate tools only (In case of uncertainty, please consult the manufacturer of the tools for use with flammable refrigerants)
- Ensure that contamination of different refrigerants does not occur when using charging equipment. Hoses or lines shall be as short as possible to minimize the amount of refrigerant contained in them.
- Cylinders shall be kept upright.
- Ensure that the refrigeration system is earthed prior to charging the system with refrigerant.
- Label the system when charging is complete (if not already).
- Extreme care shall be taken not to overfill the refrigeration system.
- Prior to recharging the system, it shall be pressure tested with oxygen free nitrogen (OFN). The system shall be leak tested on completion of charging but prior to commissioning. A follow up leak test shall be carried out prior to leaving the site.

16. Decommissioning

Before carrying out this procedure, it is essential that the technician is completely familiar with the equipment and all its detail. It is recommended good practice that all refrigerants are recovered safely. Prior to the task being carried out, an oil and refrigerant sample shall be taken in case analysis is required prior to re-use of recovered refrigerant. It is essential that electrical power is available before the task is commenced.

a) Become familiar with the equipment and its operation.
b) Isolate system electrically
c) Before attempting the procedure ensure that:

- mechanical handling equipment is available, if required, for handling refrigerant cylinders;
- all personal protective equipment is available and being used correctly;
- the recovery process is supervised at all times by a competent person;
- recovery equipment and cylinders conform to the appropriate standards.

d) Pump down refrigerant system, if possible.
e) If a vacuum is not possible, make a manifold so that refrigerant can be removed from various parts of the system.
f) Make sure that cylinder is situated on the scales before recovery takes place.
g) Start the recovery machine and operate in accordance with instructions.
h) Do not overfill cylinders (no more than 80% volume liquid charge).
i) Do not exceed the maximum working pressure of the cylinder, even temporarily.
j) When the cylinders have been filled correctly and the process completed, make sure that the cylinders and the equipment are removed from site promptly and all isolation valves on the equipment are closed off.
k) Recovered refrigerant shall not be charged into another refrigeration system unless it has been cleaned and checked.

17. Labelling

Equipment shall be labelled stating that it has been de-commissioned and emptied of refrigerant. The label shall be dated and signed. For appliances containing FLAMMABLE REFRIGERANTS, ensure that there are labels on the equipment stating the equipment contains FLAMMABLE REFRIGERANT.

18. Recovery

When removing refrigerant from a system, either for servicing or decommissioning, it is recommended good practice that all refrigerants are removed safely.
When transferring refrigerant into cylinders, ensure that only appropriate refrigerant recovery cylinders are employed. Ensure that the correct number of cylinders for holding the total system charge is available. All cylinders to be used are designated

for the recovered refrigerant and labelled for that refrigerant (i.e., special cylinders for the recovery of refrigerant). Cylinders shall be complete with pressure-relief valve and associated shut-off valves in good working order. Empty recovery cylinders are evacuated and, if possible, cooled before recovery occurs.
The recovery equipment shall be in good working order with a set of instructions concerning the equipment that is at hand and shall be suitable for the recovery of the flammable refrigerant. If in doubt, the manufacturer should be consulted. In addition, a set of calibrated weighing scales shall be available and in good working order. Hoses shall be complete with leak-free disconnect couplings and in good condition.
The recovered refrigerant shall be processed according to local legislation in the correct recovery cylinder, and the relevant waste transfer note arranged. Do not mix refrigerants in recovery units and especially not in cylinders.
If compressors or compressor oils are to be removed, ensure that they have been evacuated to an acceptable level to make certain that flammable refrigerant does not remain within the lubricant. The compressor body shall not be heated by an open flame or other ignition sources to accelerate this process. When oil is drained from a system, it shall be carried out safely.

19. Transportation, marking and storage for units

1. Transport of equipment containing flammable refrigerants
   Compliance with the transport regulations.
2. Marking of equipment using signs
   Compliance with local regulations.
3. Disposal of equipment using flammable refrigerants
   Compliance with national regulations.
4. Storage of equipment/appliances
   The storage of equipment should be in accordance with the manufacturer's instructions.
5. Storage of packed (unsold) equipment
   Storage package protection should be constructed such that mechanical damage to the equipment inside the package will not cause a leak of the refrigerant charge. The maximum number of pieces of equipment permitted to be stored together will be determined by local regulations.

Explanation of symbols displayed on the indoor unit or outdoor unit

	**WARNING**	This symbol shows that this appliance used a flammable refrigerant. If the refrigerant is leaked and exposed to an external ignition source, there is a risk of fire.
	**CAUTION**	This symbol shows that the operation manual should be read carefully.
	**CAUTION**	This symbol shows that a service personnel should be handling this equipment with reference to the installation manual.
	**CAUTION**	
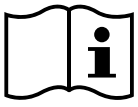	**CAUTION**	This symbol shows that information is available such as the operating manual or installation manual.

Get to Know Your AC

NOTE

- Different models have different front panel and display window. Not all the indicators describing below are available for the air conditioner you purchased. Please check the indoor display window of the unit you purchased.
- Illustrations in this manual are for explanatory purposes. The actual shape of your indoor unit may be slightly different. The actual shape shall prevail.

Indoor Unit Display

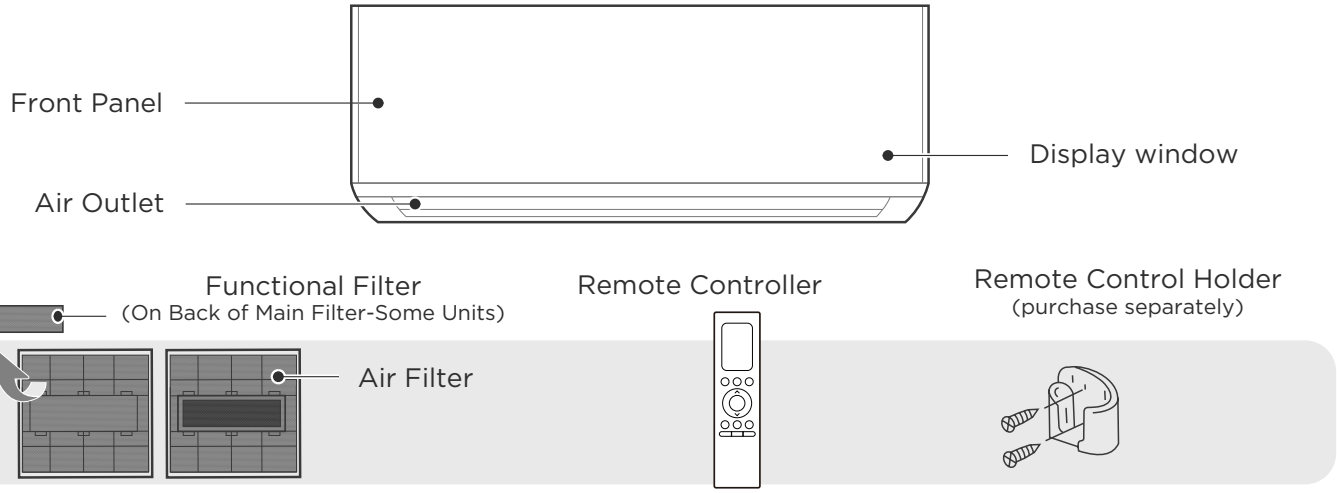

Display Window	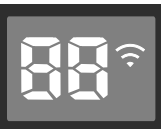
Display Code	**Display Code Meanings**
	• When Wireless Control feature is activated(For APP control units).
	• Displays temperature, operation feature and Error codes:
 (for 3s when)	• TIMER ON is set (if the unit is OFF, "  "remains on when TIMER ON is set). • SWING, TURBO or SILENCE feature is turned on.
 (for 3s when)	• TIMER OFF is set. • SWING, TURBO or SILENCE feature is turned off.
	• When defrosting.
	• When Active Clean feature is turned on.
	• When 46˚F(8˚C) heating feature is turned on.

More Features

NOTE

Every time the air conditioner is powered on, a buzzing sound will be heard to indicate that the product has been powered on normally. If there is no sound, it is possible that the unit is abnormal. Please power on again or check the circuit.
The actual functions are subject to the product you purchased, please check the indoor display and remote control of your AC. See the <Remote Controller Manual> for more features.

- **Auto-Restart**

  If the unit loses power, it will automatically restart with the prior settings once power has been restored.

- **Breeze Away**

  This feature avoids direct air flow blowing on the body and make you feel indulging in silky coolness.

- **Wireless Control (For App control units)**

  Wireless control allows you to control your air conditioner using your mobile phone and a wireless connection.

  For the USB device access, replacement, maintenance operations must be carried out by professional staff.

- **Active Clean function**

-- The Active Clean Technology washes away dust when it adheres to the heat exchanger by automatically freezing and then rapidly thawing the frost. A “pi-pi” sound will be heard.
The Active clean operation is used to produce more condensed water to improve the cleaning effect, and the cold air will blow out. After cleaning, the internal wind wheel then keeps operating with hot air to blow-dry the evaporator, thus keeping the inside clean.

-- When this function is turned on, the indoor unit display window appears “CL”, after 20 to 45 minutes, the unit will turn off automatically and cancel Active Clean function.

- **Louver Angle Memory**

  When turning on your unit, the louver will automatically resume its former angle.

- **Heat exchanger dust removal function:**

  This feature helps keep the outdoor coil cleaner and may extend the duration between regular maintenance intervals depending on local conditions. When the unit is turned off, a 10 second delay occurs then the outdoor fan runs in reverse rotation for 70 seconds to blow off loose accumulated dust and debris.

- **Refrigerant Leakage Detection**

- When the system detects a malfunction of the refrigerant, the indoor unit will automatically display the following error codes:
“EL0C (System lacks refrigerant)”,
“EHC1 (Refrigerant sensor detects leakage)”,
“EHC2 (Working condition of the refrigerant sensor is out of range and leakage is detected)”,
“EHC3 (Working condition of the refrigerant sensor is out of range)”, or
“ECC1 (Other indoor unit refrigerant sensor detects leakage [multi-zone])”.
- When “EHC1” or “EHC2” error occurs, the buzzer will continue to beep for 5 to 6 minutes before stopping. You can also press any button on the remote controller to stop the buzzer.

  Note: Error codes of “EHC1”, “EHC2”, “EHC3” and “ECC1” are only applicable to the units with refrigerant sensor.

- **Sleep Operation**

  The SLEEP function is used to decrease energy use while you sleep (and don’t need the same temperature settings to stay comfortable).

  Press the **SLEEP** button on remote control when in COOL mode, the unit will increase the temperature by 1°C (2°F) after 1 hour, and will increase an additional 1°C (2°F) after another hour.

  When in HEAT mode, the unit will decrease the temperature by 1°C (2°F) after 1 hour, and will decrease an additional 1°C (2°F) after another hour.

  The sleep feature will stop after 8 hours and the system will keep running with final situation.

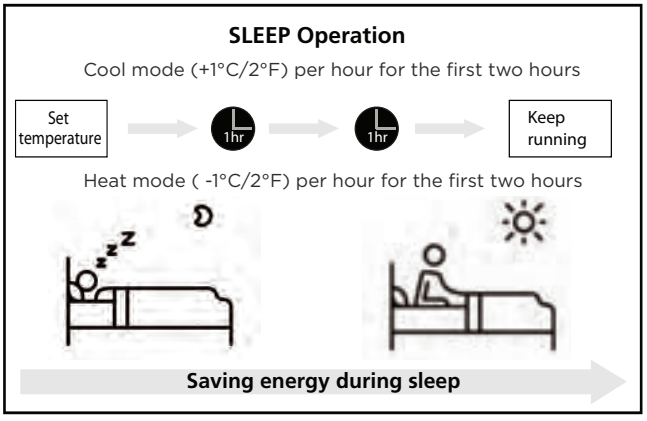

Setting Angle of Air Flow

NOTE: Setting vertical angle of air flow (Remote control)

While the unit is on, use the SWING/DIRECT button on remote control to set the direction (vertical angle) of airflow. Please refer to the Remote Control Manual for details.

NOTE ON LOUVER ANGLES

- Do not set louver at too vertical an angle for long periods of time When using COOL or DRY mode. It would be condensing the water on the louver blade, which will drop on your floor or furnishings.



- Setting the louver at too small an angle when using COOL or HEAT mode, can reduce the performance of the AC due to restricted air flow.

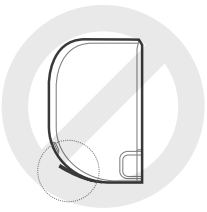

- According to the relative standards requirement, please sets the vertical air flow louver to its maximum angle under heating capacity test.

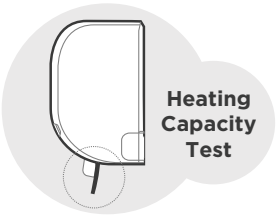

NOTE

Do not move louver by hand. You can turn off the unit and unplug it for a few seconds to restart the unit. It will be reset the louver when you try.

Setting horizontal angle of air flow (Manual operation)

The horizontal angle of the airflow must be set manually. Grip the deflector rod and manually adjust it to your preferred direction.
The horizontal angle of the airflow can be set by remote control. please refer to the Remote Control Manual.

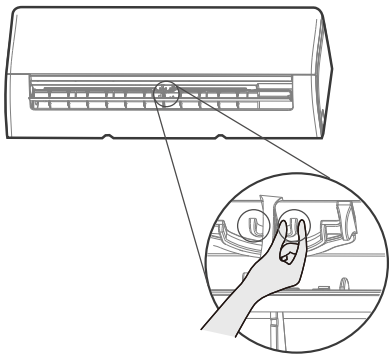

Deflector rod

⚠ CAUTION

Do not put your fingers in or near the blower and suction side of the unit. The high-speed fan inside the unit may cause injury.

Manual Operation (without remote)

> ⚠ **CAUTION:** For product use
>
> The manual button is intended for testing purposes and emergency operation only. Please do not use this function unless the remote control is lost and it is absolutely necessary. To restore regular operation, use the remote control to activate the unit. Unit must be turned off before manual operation.

To operate your unit manually:

- Open the front panel of the indoor unit.
  Note: If there is a supporting rod located on the left or right side. Please use it to prop up the panel.
- Locate the **MANUAL CONTROL button** on the right-hand side of the unit.
- Press the **MANUAL CONTROL button** one time to activate FORCED AUTO mode.
- Press the **MANUAL CONTROL button** again to activate FORCED COOLING mode.
- Press the **MANUAL CONTROL button** a third time to turn the unit off.
- Release the supporting rod (if any), then close the front panel.

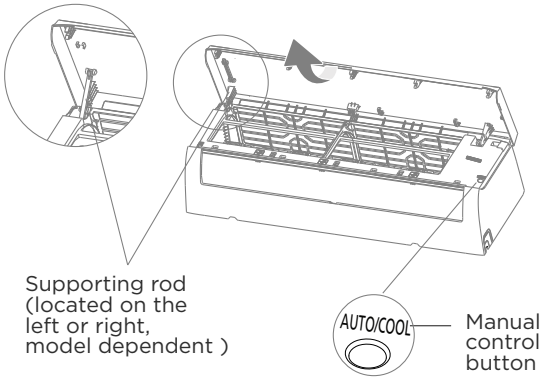

Care and Maintenance

⚠ CAUTION

- A clogged air conditioner can reduce the cooling efficiency of your unit, and can also be bad for your health. Make sure to clean the filter every two weeks.
- Always **TURN OFF** your AC system and disconnect its power supply before cleaning or maintenance.
- **Do not** touch air freshening (Plasma) filter at least 10 minutes after turning off the unit.
- Only use a soft, dry cloth to wipe the unit clean. You can use a cloth soaked in warm water to wipe it clean if the unit is especially dirty.
- Do not use chemicals or chemically treated cloths to clean the unit
- Do not use benzene, paint thinner, polishing powder or other solvents to clean the unit. They can cause the plastic surface to crack or deform.
- Do not use water hotter than 104°F(40°C) to clean the front panel. This can cause the panel to deform or become discolored.

Cleaning Your Indoor Unit, Air Filter

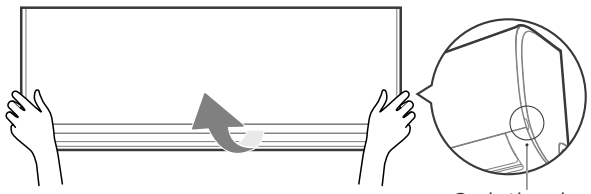

Step 1:

Lift the front panel of the indoor unit. For the unit with supporting rod, please use it to prop up the front panel.

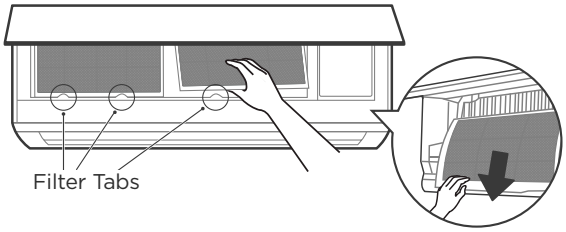

Step 2:

Grip the tab on the end of the filter, lift it up, then pull it towards yourself and pull the filter out.

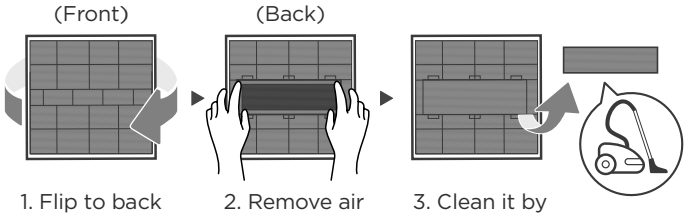

Step 3:

If your filter has a small air freshening filter, unclip it from the larger filter. Clean this air freshening filter with a hand-held vacuum.

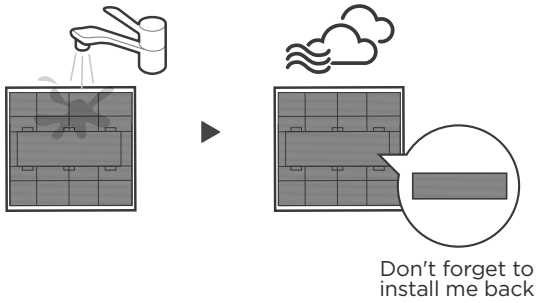

Step 4:

Clean the large air filter with warm, soapy water. Be sure to use a mild detergent. Rinse the filter with fresh water, then shake off excess water. Dry it in a cool, dry place, and refrain from exposing it to direct sunlight.

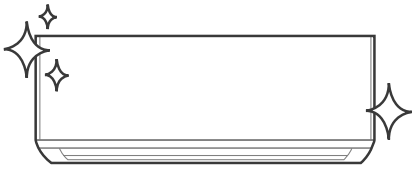

Step 5:

When dry, re-clip the air freshening filter to the larger filter, then slide it back into the indoor unit. Finally, Close the front panel of the indoor unit.

⚠ CAUTION

- Before changing the filter or cleaning, turn off the unit and disconnect its power supply.
- When removing filter, do not touch metal parts in the unit. The sharp metal edges can cut you.
- Do not use water to clean the inside of the indoor unit. This can destroy insulation and cause electrical shock.
- Do not expose filter to direct sunlight when drying. This can shrink the filter.
- Any maintenance and cleaning of outdoor unit should be performed by an authorized dealer or a licensed service provider.
- Any unit repairs should be performed by an authorized dealer or a licensed service provider.

Maintenance your AC.

Maintenance – Long Periods of Non-Use

If you plan not to use your air conditioner for an extended period of time, do the following:

Clean all filters

Turn on FAN function until unit dries out completely

Turn off the unit and disconnect the power

Remove batteries from remote control

Maintenance – Pre-Season Inspection

After long periods of non-use, or before periods of frequent use, do the following:

Check for damaged wires

Clean all filters

Check for leaks



Make sure nothing is blocking all air inlets and outlets

Replace batteries

Troubleshooting

⚠ CAUTION

If any of the following conditions occurs, turn off your unit immediately!
- The wire is damaged or abnormally warm
- You smell a burning odor
- The unit emits loud or abnormal sounds
- A power fuse blows or the circuit breaker frequently trips
- Water or other objects fall into or out of the unit

DO NOT ATTEMPT TO FIX THESE YOURSELF! CONTACT AN AUTHORIZED SERVICE PROVIDER IMMEDIATELY.

Common Issues

The following problems are not a malfunction, and in most situations, will not require repairs.

Issue	Possible Causes
Unit does not turn on when pressing ON/OFF button	The Unit has a 3-minute protection feature that prevents the unit from overloading. The unit cannot be restarted within three minutes of being turned off.
The unit changes from COOL/HEAT mode to FAN mode	The unit may change its setting to prevent frost from forming on the unit. Once the temperature increases, the unit will start operating in the previously selected mode again. The set temperature has been reached, at which point the unit turns off the compressor. The unit will continue operating when the temperature fluctuates again.
The indoor unit emits white mist	In humid regions, a large temperature difference between the room's air and the conditioned air can cause white mist.
Both the indoor and outdoor units emit white mist	When the unit restarts in HEAT mode after defrosting, white mist may be emitted due to moisture generated from the defrosting process.
The indoor unit makes noises	A rushing air sound may occur when the louver resets its position. A squeaking sound may occur after running the unit in HEAT mode due to expansion and contraction of the unit's plastic parts.
Both the indoor unit and outdoor unit make noises	Low hissing sound during operation: This is normal and is caused by refrigerant gas flowing through both indoor and outdoor units.
	Low hissing sound when the system starts, has just stopped running, or is defrosting: This noise is normal and is caused by the refrigerant gas stopping or changing direction.
	Squeaking sound: Normal expansion and contraction of plastic and metal parts caused by temperature changes during operation can cause squeaking noises.

Issue	Possible Causes
The outdoor unit makes noises	The unit will make different sounds based on its current operating mode.
Dust is emitted from either the indoor or outdoor unit	The unit may accumulate dust during extended periods of non-use, which will be emitted when the unit is turned on. This can be mitigated by covering the unit during long periods of inactivity.
The unit emits a bad odor	The unit may absorb odors from the environment (such as furniture, cooking, cigarette, etc.) which will be emitted during operations. The unit's filters have become moldy and should be cleaned.
The fan of the outdoor unit does not operate	During operation, the fan speed is controlled to optimize product operation.
Operation is erratic, unpredictable, or unit is unresponsive	Interference from cell phone towers and remote boosters may cause the unit to malfunction. In this case, try the following: • Disconnect the power, then reconnect. • Press ON/OFF button on remote control to restart operation.

NOTE: If problem persists, contact a local dealer or your nearest customer service center. Provide them with a detailed description of the unit malfunction as well as your model number.

⚠ CAUTION

When troubles occur, please check the following points before contacting a repair company.

Problem	Possible Causes	Solution
Poor Cooling Performance	Temperature setting may be higher than ambient room temperature	Lower the temperature setting
	The heat exchanger on the indoor or outdoor unit is dirty	Use Clean function by remote control to clean the affected heat exchanger
	The air filter is dirty	Remove the filter and clean it according to instructions
	The air inlet or outlet of either unit is blocked	Turn the unit off, remove the obstruction and turn it back on
	Doors and windows are open	Make sure that all doors and windows are closed while operating the unit
	Excessive heat is generated by sunlight	Close windows and curtains during periods of high heat or bright sunshine
	Too many sources of heat in the room (people, computers, electronics, etc.)	Reduce amount of heat sources
	Low refrigerant due to leak or long-term use	Check for leaks, re-seal if necessary and top off refrigerant
	SILENCE function is activated (optional function)	SILENCE function can lower product performance by reducing operating frequency. Turn off SILENCE function.

Problem	Possible Causes	Solution
The unit is not working	Power failure	Wait for the power to be restored
	The power is turned off	Turn on the power
	The fuse is burned out	Call service center to replace the fuse
	Remote control batteries are dead	Replace batteries
	The Unit's 3-minute protection has been activated	Wait three minutes after restarting the unit
	Timer is activated	Turn timer off
The unit starts and stops frequently	There's too much or too little refrigerant in the system	Call service center to check for leaks and recharge the system with refrigerant.
	Incompressible gas or moisture has entered the system.	Call service center to evacuate and recharge the system with refrigerant
	The compressor is broken	Call service center to replace the compressor
	The voltage is too high or too low	Install a manostat to regulate the voltage
Poor heating performance	The outdoor temperature is extremely low	Use auxiliary heating device
	Cold air is entering through doors and windows	Make sure that all doors and windows are closed during use
	Low refrigerant due to leak or long-term use	Call service center to check for leaks, re-seal if necessary and top off refrigerant
Indicator lamps continue flashing **Error code appears and begins with the letters as the following in the window display of indoor unit:** • E(x), P(x), F(x) • EH(xx), EL(xx), EC(xx) • PH(xx), PL(xx), PC(xx)	The unit may stop operation or continue to run safely. If the indicator lamps continue to flash or error codes appear, wait for about 10 minutes. The problem may resolve itself. If not, disconnect the power, then connect it again. Turn the unit on. If the problem persists, disconnect the power and contact your nearest customer service center.	

NOTE: If your problem persists after performing the checks and diagnostics above, turn off your unit immediately and contact an authorized service center.

Installation Instructions

Safety Precautions 23

Let's Start Installing Your AC 31

Installation Overview 32

Installation Summary - Indoor Unit 33

Install Your Indoor Unit 35

Install Your Outdoor Unit 45

Refrigerant Piping Connection 49

Air Evacuation 53

Electrical and Gas Leak Checks 55

Test Run 56

Packing and Unpacking the Unit 57

Explanation of symbols displayed on the indoor unit or outdoor unit

	**WARNING**	This symbol shows that this appliance used a flammable refrigerant. If the refrigerant is leaked and exposed to an external ignition source, there is a risk of fire.
	**CAUTION**	This symbol shows that the operation manual should be read carefully.
	**CAUTION**	This symbol shows that a service personnel should be handling this equipment with reference to the installation manual.
	**CAUTION**	
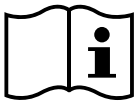	**CAUTION**	This symbol shows that information is available such as the operating manual or installation manual.

Safety Precautions

It is really important you read Safety Precautions Before Operation and Installation Incorrect installation due to ignoring instructions can cause serious damage or injury. The seriousness of potential damage or injuries is classified as either a WARNING or CAUTION.

Explanation of Symbols

WARNING

This symbol indicates the possibility of personal injury or loss of life.

CAUTION

This symbol indicates the possibility of property damage or serious consequences.

⚠ WARNING

This appliance is not intended for use by persons (including children) with reduced physical, sensory or mental capabilities, or lack of experience and knowledge, unless they have been given supervision or instruction concerning use of the appliance by a person responsible for their safety. Children should be supervised to ensure that they do not play with the appliance.

⚠ ELECTRICAL WARNINGS

- Only use the specified wire. If the wire is damaged, it must be replaced by the manufacturer, its service agent or similarly qualified persons in order to avoid a hazard.
- The product must be properly grounded at the time of installation, or electric shock may occur.
- For all electrical work, follow all local and national wiring standards, regulations, and the Installation Manual. Connect cables tightly, and clamp them securely to prevent external forces from damaging the terminal. Improper electrical connections can overheat and cause fire, and may also cause shock. All electrical connections must be made according to the Electrical Connection Diagram located on the panels of the indoor and outdoor units.
- All wiring must be properly arranged to ensure that the control board cover can close properly. If the control board cover is not closed properly, it can lead to corrosion and cause the connection points on the terminal to heat up, catch fire, or cause electrical shock.
- Disconnection must be incorporated in the fixed wiring in accordance with the wiring rules.
- Do not share the electrical outlet with other appliances. Improper or insufficient power supply can cause fire or electric shock.
- If connecting power to fixed wiring, an all-pole disconnection device must be incorporated in the fixed wiring in accordance with the wiring rules.

⚠ WARNINGS FOR PRODUCT INSTALLATION

- Turn off the air conditioner and disconnect the power before performing any installation or repairing. Failure to do so can cause electric shock.
- Installation must be performed by an authorized dealer or specialist. Defective installation can cause water leakage, electrical shock, or fire.
- Installation must be performed according to the installation instructions. Improper installation can cause water leakage, electrical shock, or fire. Contact an authorized service technician for repair or maintenance of this unit.
- This appliance shall be installed in accordance with national wiring regulations. Only use the included accessories, parts, and specified parts for installation.
- Using non-standard parts can cause water leakage, electrical shock, fire, and can cause the unit to fail.
- Install the unit in a firm location that can support the unit's weight. If the chosen location cannot support the unit's weight, or the installation is not done properly, the unit may drop and cause serious injury and damage.
- Install drainage piping according to the instructions in this manual. Improper drainage may cause water damage to your home and property.
- For units that have an auxiliary electric heater, do not install the unit within 1 meter (3 feet) of any combustible materials.
- For the units that have a wireless network function, the USB device access, replacement, maintenance operations must be carried out by professional staff.
- Do not install the unit in a location that may be exposed to combustible gas leaks. If combustible gas accumulates around the unit, it may cause fire.
- Do not turn on the power until all work has been completed.
- When moving or relocating the air conditioner, consult experienced service technicians for disconnection and reinstallation of the unit.
- How to install the appliance to its support, please read the information for details in "indoor unit installation" and "outdoor unit installation" sections.

TAKE NOTE OF FUSE SPECIFICATIONS

The air conditioner's circuit board (PCB) is designed with a fuse to provide overcurrent protection. The specifications of the fuse are printed on the circuit board, for example: T3.15AL/250VAC, T5AL/250VAC, T3.15A/250VAC, T5A/250VAC, T20A/250VAC, T30A/250VAC, etc.
NOTE: Only the blast-proof ceramic fuse can be used.

⚠ WARNING FOR USING FLAMMABLE REFRIGERANTS

- Do not use means to accelerate the defrosting process or to clean, other than those recommended by the manufacturer.
- The appliance shall be stored in a room without continuously operating ignition sources (for example: open flames, an operating gas appliance or an operating electric heater).
- Do not pierce or burn.
- Be aware that refrigerants may not contain an odour.

For R454B refrigerant charge amount and minimum room area:

The machine you purchased may be one of the types in the table below. The indoor and outdoor units are designed to be used together. Please check the machine you purchased. The indoor unit should be installed at least 6.0ft /1.8m above from the floor, the height of the room cannot be less than 7.3ft /2.2m, and the minimum room area of operating or storage should be as specified in the following table.

A_{min} [ft²/m²]	**h_{inst}[ft/m]**					
m_c or m_{REL} [oz/kg]	6.0～7.3/ 1.8～2.2	7.6/2.3	7.9/2.4	8.6/2.6	9.2/2.8	9.9/3.0
<=62.6/1.776	12/1.10					
63.4/1.8	60/5.53	57/5.29	55/5.07	51/4.68	47/4.35	44/4.06
70.5/2.0	67/6.15	64/5.88	61/5.64	56/5.2	52/4.83	49/4.51
77.5/2.2	73/6.76	70/6.47	67/6.2	62/5.72	58/5.31	54/4.96
84.6/2.4	80/7.38	76/7.06	73/6.76	68/6.24	63/5.8	59/5.41
91.7/2.6	86/7.99	83/7.64	79/7.32	73/6.76	68/6.28	64/5.86
98.7/2.8	93/8.6	89/8.23	85/7.89	79/7.28	73/6.76	68/6.31
105.8/3.0	100/9.22	95/8.82	91/8.45	84/7.8	78/7.24	73/6.76
112.8/3.2	106/9.83	102/9.41	97/9.01	90/8.32	84/7.73	78/7.21
119.9/3.4	113/10.45	108/9.99	104/9.58	96/8.84	89/8.21	83/7.66
126.9/3.6	120/11.06	114/10.58	110/10.14	101/9.36	94/8.69	88/8.11
134/3.8	126/11.68	121/11.17	116/10.7	107/9.88	99/9.17	93/8.56
141.1/4.0	133/12.29	127/11.76	122/11.27	112/10.4	104/9.66	97/9.01
148.1/4.2	139/12.9	133/12.34	128/11.83	118/10.92	110/10.14	102/9.46
155.1/4.4	146/13.52	140/12.93	134/12.39	124/11.44	115/10.62	107/9.91
162.2/4.6	153/14.13	146/13.52	140/12.96	129/11.96	120/11.11	112/10.37
169.2/4.8	159/14.75	152/14.11	146/13.52	135/12.48	125/11.59	117/10.82
176.3/5.0	166/15.36	159/14.69	152/14.08	140/13	130/12.07	122/11.27
Area formula	**A_{min}** is the required minimum room area in ft²/m² **m_c** is the actual refrigerant charge in the system in oz/kg **m_{REL}** is the refrigerant releasable charge in oz/kg (Applicable to the units with refrigerant sensors only) **h_{inst}** is the height of the bottom of the appliance relative to the floor of the room after installation. **WARNING:** The minimum room area or minimum room area of conditioned space is based on releasable charge and total system refrigerant charge.					

For the units with refrigerant sensors, when the unit detects a refrigerant leak, the minimum airflow of the indoor unit is as follows:

Hyper Heat Series

Model	Indoor unit	Outdoor unit	Indoor nominal air volume	
06K	DAP06W2A1	/	400m³/h	235CFM
09K	DAP09W2A1	DAP091H2A1	500m³/h	295CFM
12K	DAP12W2A1	DAP121H2A1	500m³/h	295CFM
18K	DAP18W2A1	DAP181H2A1	850m³/h	500CFM
24K	DAP24W2A1	DAP241H2A1	1000m³/h	590CFM
33K	DAP33W2A1	DAP331H2A1	1150m³/h	675CFM

The information in the following table is only applicable to models without refrigerant sensors:

Entry Tier Series

Model	Indoor unit	Outdoor unit
09K(115V)	DTS09W1A1	DTS091H1A1
09K	DTS09W2A1	DTS091H2A1
12K(115V)	DTS12W1A1	DTS121H1A1
12K	DTS12W2A1	DTS121H2A1
18K	DTS18W2A1	DTS181H2A1
24K	DTS24W2A1	DTS241H2A1

1. Installation (where refrigerant pipes are allowed)

- Any person who is involved with working on or breaking into a refrigerant circuit should hold a current valid certificate from an industry-accredited assessment authority, which authorizes their competence to handle refrigerants safely in accordance with an industry recognized assessment specification.
- Maintenance and repair requiring the assistance of other skilled personnel shall be carried out under the supervision of the person competent in the use of flammable refrigerants.
- That the installation of pipe-work shall be kept to a minimum.
- That pipe-work shall be protected from physical damage.
- Where refrigerant pipes shall be compliance with national gas regulations.
- That mechanical connections shall be accessible for maintenance purposes.
- Be more careful that foreign matter(oil, water, etc.) does not enter the piping. Also, when storing the piping, securely seal the opening by pinching, taping, etc.
- All working procedure that affects safety means shall only be carried by competent persons.
- Appliance shall be stored in a well-ventilated area where the room size corresponds to the room area as specific for operation.
- Joints shall be tested with detection equipment with a capability of 5 g/year of refrigerant or better, with the equipment in standstill and under operation or under a pressure of at least these standstill or operation conditions after installation. Detachable joints shall NOT be used in the indoor side of the unit (brazed, welded joint could be used).
- In cases that require mechanical ventilation, ventilation openings shall be kept clear of obstruction.
- LEAK DETECTION SYSTEM installed. Unit must be powered except for service. When the refrigerant sensor detects refrigerant leakage, the indoor unit will display an error code and emit a buzzing sound, the compressor of outdoor unit will immediately stop, and the indoor fan will start running. The service life of the refrigerant sensor is 15 years. When the refrigerant sensor malfunctions, the indoor unit will display the error code “FHCC”. The refrigerant sensor cannot be repaired and can only be replaced by the manufacturer. It shall only be replaced with the sensor specified by the manufacturer. (Applicable to the units with refrigerant sensor only)

2. When a FLAMMABLE REFRIGERANT is used, the requirements for installation space of appliance and/or ventilation requirements are determined according to

- the mass charge amount(M) used in the appliance,
- the installation location,
- the type of ventilation of the location or of the appliance.
- piping material, pipe routing, and installation shall include protection from physical damage in operation and service, and be in compliance with national and local codes and standards, such as ASHRAE 15, IAPMO Uniform Mechanical Code, ICC International Mechanical Code, or CSA B52. All field joints shall be accessible for inspection prior to being covered or enclosed.
- that protection devices, piping, and fittings shall be protected as far as possible against adverse environmental effects, for example, the danger of water collecting and freezing in relief pipes or the accumulation of dirt and debris;
- that piping in refrigeration systems shall be so designed and installed to minimize the likelihood of hydraulic shock damaging the system;
- that steel pipes and components shall be protected against corrosion with a rustproof coating before applying any insulation;
- that precautions shall be taken to avoid excessive vibration or pulsation;
- the minimum floor area of the room shall be mentioned in the form of a table or a single figure without reference to a formula;
- after completion of field piping for split systems, the field pipework shall be pressure tested with an inert gas and then vacuum tested prior to refrigerant charging, according to the following requirements:

a. The minimum test pressure for the low side of the system shall be the low side

design pressure and the minimum test pressure for the high side of the system shall be the high side design pressure, unless the high side of the system cannot be isolated from the low side of the system in which case the entire system shall be pressure tested to the low side design pressure.

b. The test pressure after removal of pressure source shall be maintained for at least 1 h with no decrease of pressure indicated by the test gauge, with test gauge resolution not exceeding 5% of the test pressure.

c. During the evacuation test, after achieving a vacuum level specified in the manual or less, the refrigeration system shall be isolated from the vacuum pump and the pressure shall not rise above 1500 microns within 10 min. The vacuum pressure level shall be specified in the manual, and shall be the lessor of 500 microns or the value required for compliance with national and local codes and standards, which may vary between residential, commercial, and industrial buildings.

- field-made refrigerant joints indoors shall be tightness tested according to the following requirements: The test method shall have a sensitivity of 5 grams per year of refrigerant or better under a pressure of at least 0,25 times the maximum allowable pressure. No leak shall be detected.

3. Qualification of workers

Any maintenance, service and repair operations must be required qualification of the working personnel. Every working procedure that affects safety means shall only be carried out by competent persons that joined the training and achieved competence should be documented by a certificate. The training of these procedures is carried out by national training organizations or manufacturers that are accredited to teach the relevant national competency standards that may be set in legislation. All training shall follow the ANNEX HH requirements of UL 60335-2-40 4th Edition.

Examples for such working procedures are:

- breaking into the refrigerating circuit;
- opening of sealed components;
- opening of ventilated enclosures.

4. Ventilated area

Ensure that the area is in the open or that it is adequately ventilated before breaking into the system or conducting any hot work. A degree of ventilation shall continue during the period that the work is carried out. The ventilation should safely disperse any released refrigerant and preferably expel it externally into the atmosphere.

5. Cabling

Check that cabling will not be subject to wear, corrosion, excessive pressure, vibration, sharp edges or any other adverse environmental effects. The check shall also take into account the effects of aging or continual vibration from sources such as compressors or fans.

6. Detection of flammable refrigerants

Under no circumstances shall potential sources of ignition be used in the searching for or detection of refrigerant leaks. A halide torch (or any other detector using a naked flame) shall not be used.

The following leak detection methods are deemed acceptable for refrigerant systems. Electronic leak detectors may be used to detect refrigerant leaks but, in the case of FLAMMABLE REFRIGERANTS, the sensitivity may not be adequate, or may need re-calibration. (Detection equipment shall be calibrated in a refrigerant-free area.) Ensure that the detector is not a potential source of ignition and is suitable for the refrigerant used. Leak detection equipment shall be set at a percentage of the LFL of the refrigerant and shall be calibrated to the refrigerant employed, and the appropriate percentage of gas (25 % maximum) is confirmed. Leak detection fluids are also suitable for use with most refrigerants but the use of detergents containing chlorine shall be avoided as the chlorine may react with the refrigerant and corrode the copper pipe-work.

NOTE Examples of leak detection fluids are
- bubble method,
- fluorescent method agents.

If a leak is suspected, all naked flames shall be removed/extinguished.
If a leakage of refrigerant is found which requires brazing, all of the refrigerant shall be recovered from the system, or isolated (by means of shut off valves) in a part of the system remote from the leak. See the following instructions of removal of refrigerant.

7. Removal and evacuation

When breaking into the refrigerant circuit to make repairs - or for any other purpose conventional procedures shall be used. However, for flammable refrigerants it is important that best practice be followed, since flammability is a consideration.
The following procedure shall be adhered to:

- safely remove refrigerant following local and national regulations;
- evacuate;
- purge the circuit with inert gas (optional for A2L);
- evacuate (optional for A2L);
- continuously flush or purge with inert gas when using flame to open circuit; and
- open the circuit

The refrigerant charge shall be recovered into the correct recovery cylinders if venting is not allowed by local and national codes. For appliances containing flammable refrigerants, the system shall be purged with oxygen-free nitrogen to render the appliance safe for flammable refrigerants. This process might need to be repeated several times. Compressed air or oxygen shall not be used for purging refrigerant systems.
For appliances containing flammable refrigerants, refrigerants purging shall be achieved by breaking the vacuum in the system with oxygen-free nitrogen and continuing to fill until the working pressure is achieved, then venting to atmosphere, and finally pulling down to a vacuum (optional for A2L). This process shall be repeated until no refrigerant is within the system (optional for A2L). When the final oxygen-free nitrogen charge is used, the system shall be vented down to atmospheric pressure to enable work to take place.
The outlet for the vacuum pump shall not be close to any potential ignition sources, and ventilation shall be available.

8. Charging procedures

In addition to conventional charging procedures, the following requirements shall be followed:

- Works shall be undertaken with appropriate tools only (In case of uncertainty, please consult the manufacturer of the tools for use with flammable refrigerants)
- Ensure that contamination of different refrigerants does not occur when using charging equipment. Hoses or lines shall be as short as possible to minimize the amount of refrigerant contained in them.
- Cylinders shall be kept upright.
- Ensure that the refrigeration system is earthed prior to charging the system with refrigerant.
- Label the system when charging is complete (if not already).
- Extreme care shall be taken not to overfill the refrigeration system.
- Prior to recharging the system, it shall be pressure tested with oxygen free nitrogen (OFN). The system shall be leak tested on completion of charging but prior to commissioning. A follow up leak test shall be carried out prior to leaving the site.

9. Recovery

When removing refrigerant from a system, either for servicing or decommissioning, it is recommended good practice that all refrigerants are removed safely.
When transferring refrigerant into cylinders, ensure that only appropriate refrigerant recovery cylinders are employed. Ensure that the correct number of cylinders for holding the total system charge is available. All cylinders to be used are designated.

Let's Start Installing Your AC

Check over the accessories

The air conditioning system comes with the following accessories. Use all of the installation parts and accessories to install the air conditioner. Improper installation may result in water leakage, electrical shock and fire, or cause the equipment to fail. The items are not included with the air conditioner must be purchased separately.

Name of Accessories	Q'ty(pc)	Shape	Name of Accessories	Q'ty(pc)	Shape
Manual	2-3		Remote controller	1	
Drain joint	1		Battery	2	
Seal	1		Remote controller holder (purchase separately)	1	
Mounting plate + Cardboard	1+1	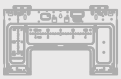	Fixing screw for remote controller holder (purchase separately)	2	
Anchor	5		**Small Filter** (Need to be installed on the back of main air filter by the authorized technician while installing the machine)	1~2	
Mounting plate fixing screw	5				
Transfer connector (Ø19(3/4in) transfer to Ø16(5/8in). Packed with the indoor unit, the North America market 33K hyper heat unit only.)	1	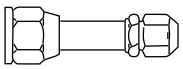 **NOTE:** In North America market, when 33K hyper heat indoor unit matches with multi-zone condensers, you must purchase pipe with liquid side Ø9.52(3/8in) and gas side Ø16(5/8in).The transfer connector need to be installed on the indoor unit gas side to meet the pipe size.				
Copper nut	2	 **NOTE:** Used to connect the connecting pipes between indoor and outdoor units.			

Name	Model	Pipe specification		Remark
		Liquid side	Gas side	
Connecting pipe assembly	6K	Ø1/4in(Ø 6.35mm)	Ø3/8in(Ø 9.52mm)	Parts you must purchase separately. Consult the dealer about the proper pipe size of the unit you purchased.
	9K	Ø1/4in(Ø 6.35mm)	Ø3/8in(Ø 9.52mm)	
	12K	Ø1/4in(Ø 6.35mm)	Ø3/8in(Ø 9.52mm)	
	18K	Ø1/4in(Ø 6.35mm)	Ø1/2in(Ø12.7mm)	
	24K	Ø3/8in(Ø 9.52mm)	Ø5/8in(Ø 16mm)	
	30K	Ø3/8in(Ø 9.52mm)	Ø5/8in(Ø 16mm)	
	33K	Ø3/8in(Ø 9.52mm)	Ø3/4in(Ø 19mm)	
	36K	Ø3/8in(Ø 9.52mm)	Ø5/8in(Ø16mm)	

Installation Overview

NOTE ON ILLUSTRATIONS:

Illustrations in this manual are for explanatory purposes. The actual shape of your indoor unit may be slightly different. The actual shape shall prevail.

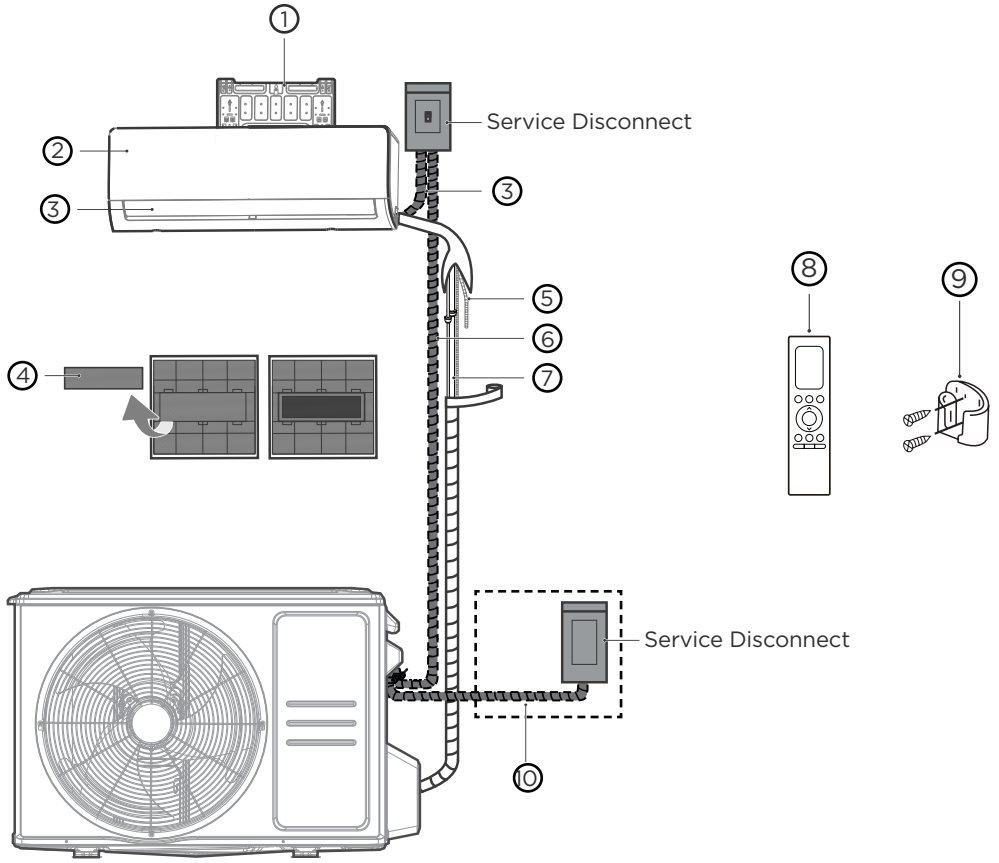

Note: Service Disconnect shall select as required by local, regional, and national codes

① Wall Mounting Plate

② Front Panel

③ Louver

④ Air Filter

⑤ Drain Pipe (purchase separately)

⑥ Connection Cable (purchase separately)

⑦ Refrigerant Piping (purchase separately)

⑧ Remote Controller

⑨ Remote controller Holder (purchase separately)

⑩ Outdoor Unit Power Cable (purchase separately)

It would be perfect you had these tools



Gloves



Screwdriver & wrench

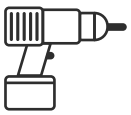

Hammer drill

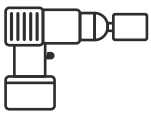

Core drill



Goggles & masks



Vinyl tape

Installation Summary - Indoor Unit

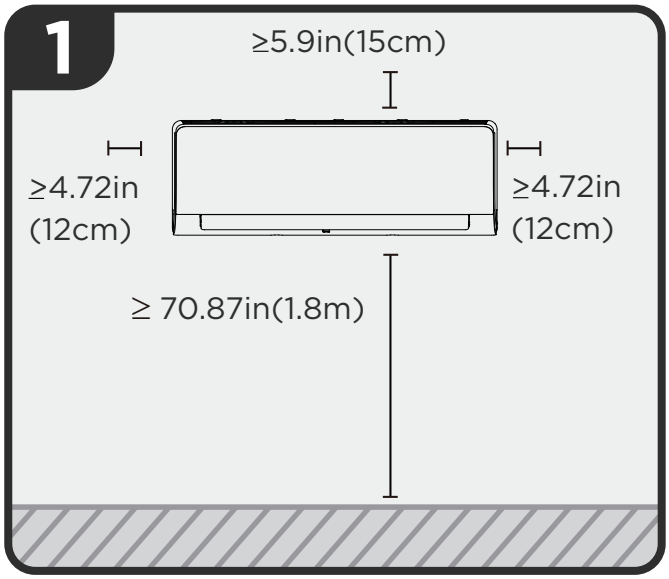

Select Installation Location

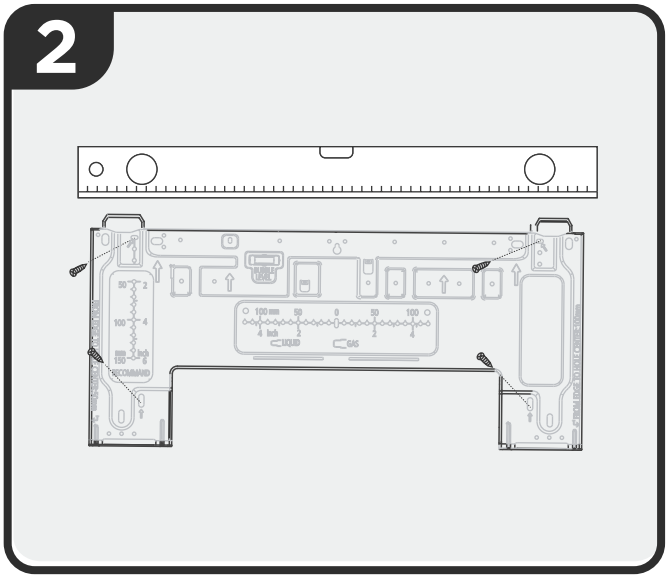

Attach Mounting Plate

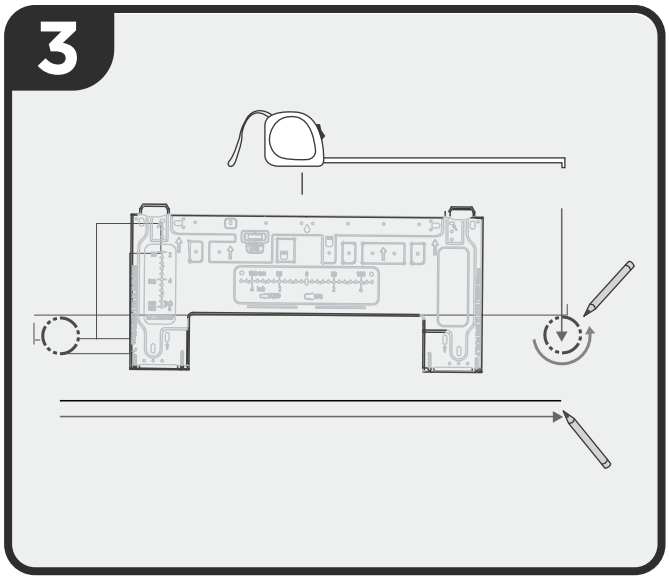

Determine Wall Hole Position

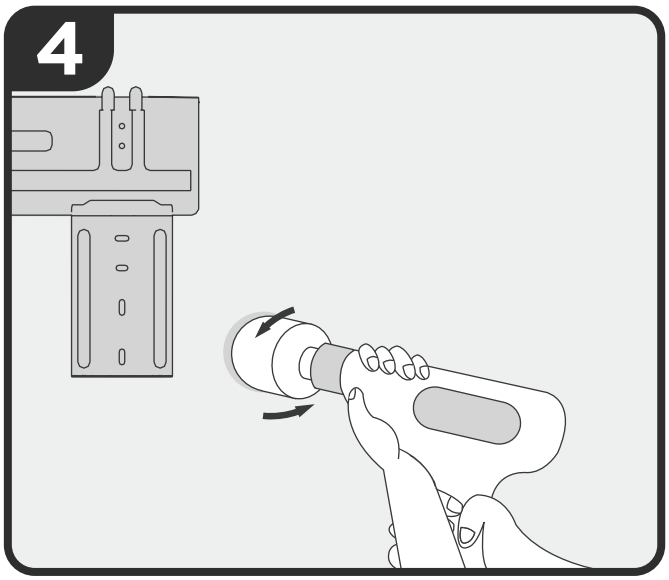

Drill Wall Hole

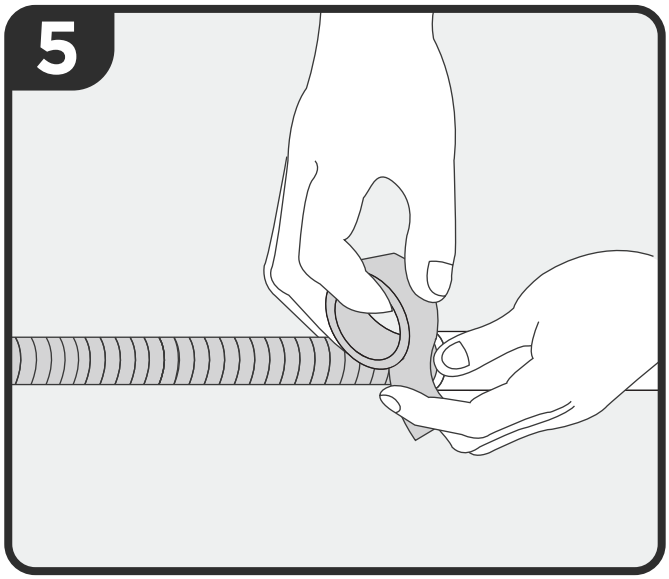

Prepare Drain Hose

Installation Summary - Indoor Unit

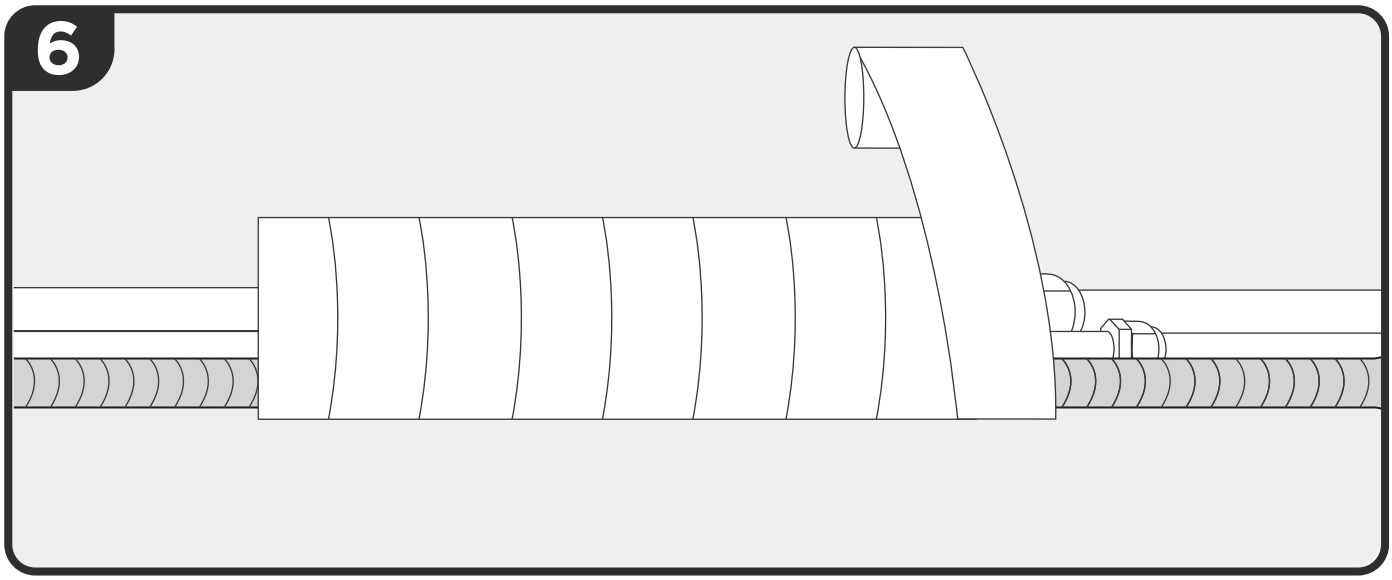

Wrap Piping and drain hose

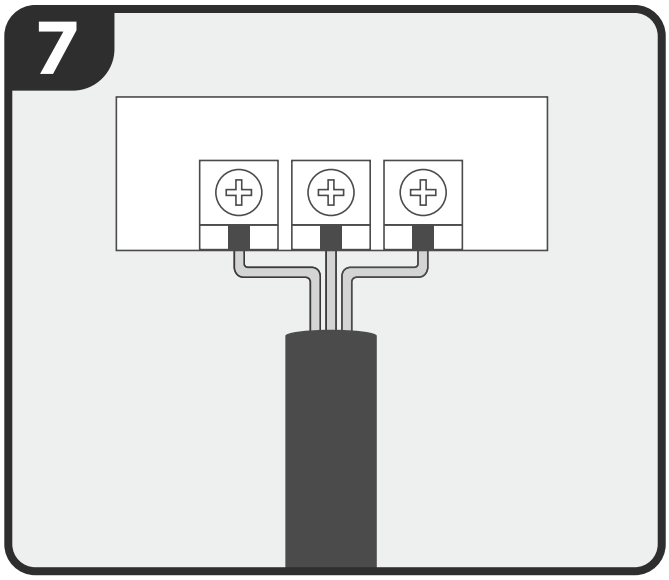

Connect Wiring

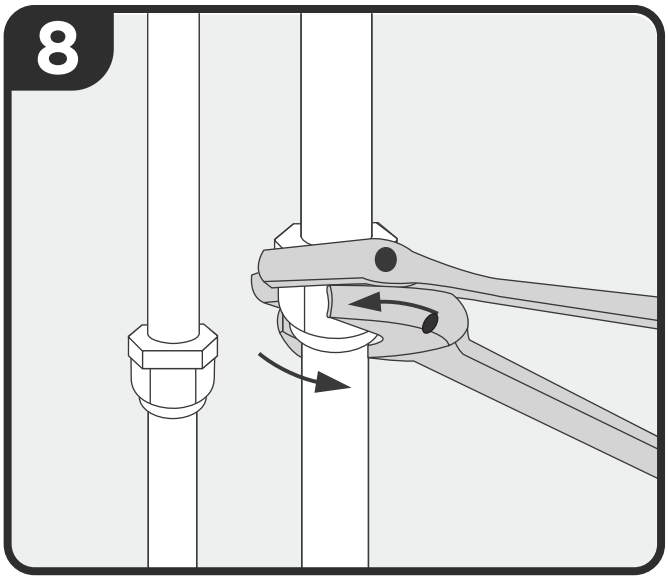

Connect Piping

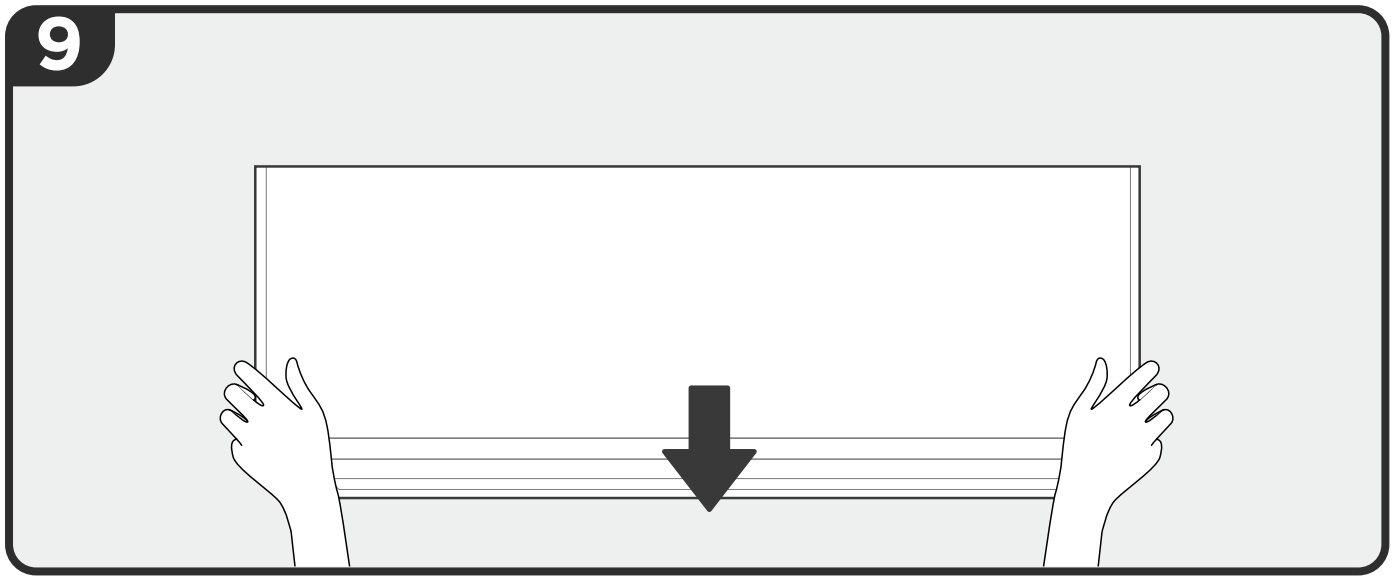

Mount Indoor Unit

Install Your Indoor Unit

1 Select installation location

NOTE: PRIOR TO INSTALLATION

Before installing the indoor unit, refer to the label on the product box to make sure that the model number of the indoor unit matches the model number of the outdoor unit.

The following are standards that will help you choose an appropriate location for the unit.

Proper installation locations meet the following standards:



☑ Good air circulation

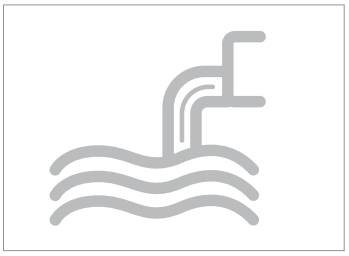

☑ Convenient drainage



☑ Noise from the unit will not disturb other people.



☑ Firm and solid—the location will not vibrate

☑ Strong enough to support the weight of the unit

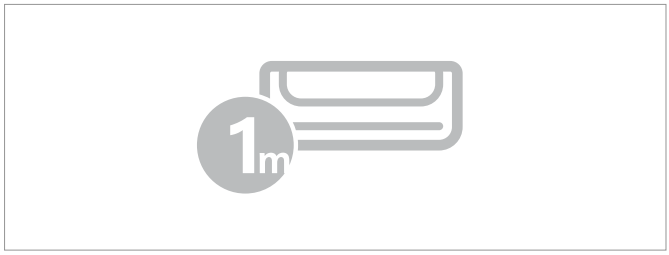

☑ A location at least one meter from all other electrical devices (e.g., TV, radio, computer)

DO NOT install unit in the following locations:

⊘ Near any source of heat, steam, or combustible gas

⊘ Near flammable items such as curtains or clothing

⊘ Near any obstacle that might block air circulation

⊘ Near the doorway

⊘ In a location subject to direct sunlight

NOTE: FOR PRODUCT INSTALLATION

If there is no fixed refrigerant piping:
While choosing a location, be aware that you should leave ample room for a wall hole (see Drill wall hole for connecting piping step) for the signal cable and refrigerant piping that connect the indoor and outdoor units. The default position for all piping is the right side of the indoor unit (while facing the unit). However, the unit can accommodate piping to both the left and right.

2 Drill wall hole for connecting piping

Determine wall hole location

Step 1:

Remove the screw that attaches the mounting plate to the back of the indoor unit.

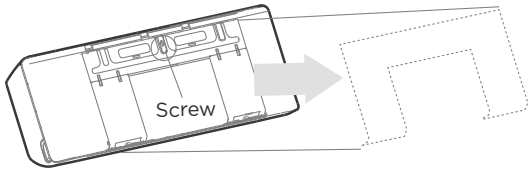

Step 2:

Secure the mounting plate to the wall with the screws provided. Make sure that mounting plate is flat against the wall.

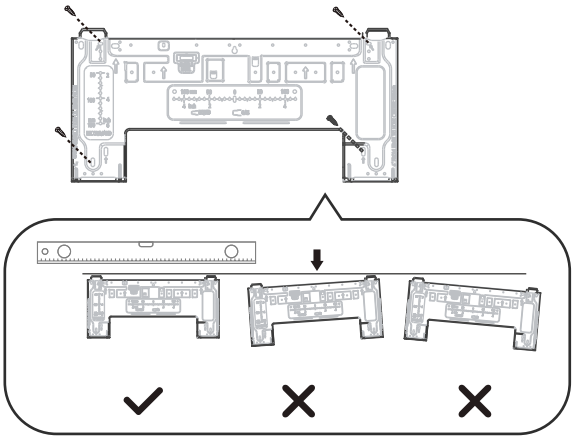

Correct orientation of Mounting Plate

Step 3:

Confirm the mounting plate you own. Determine the location of the wall hole based on the position of the mounting plate. The dotted rectangular box on the right figure shows the size of your product.

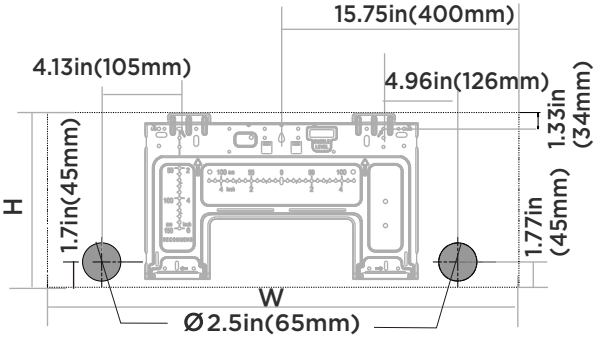

Indoor unit dimensions(WxH):
28.7in(729mm)x11.5in(293mm)

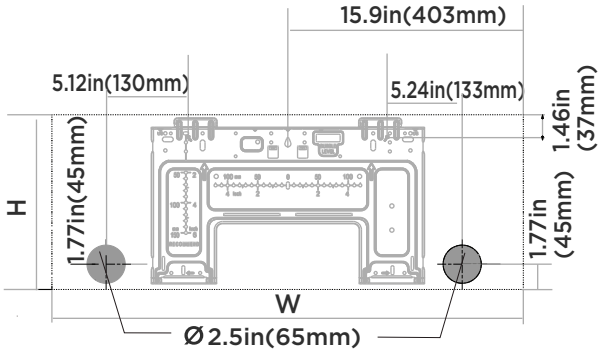

Indoor unit dimensions(WxH):
31.7in(806mm)x11.65in(296mm)

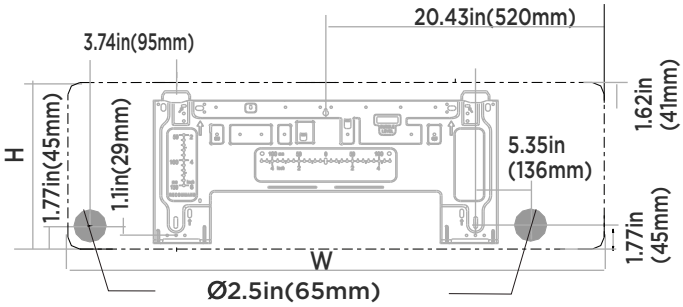

Indoor unit dimensions(WxH):
38.2in(971mm)x12.6in(321mm)

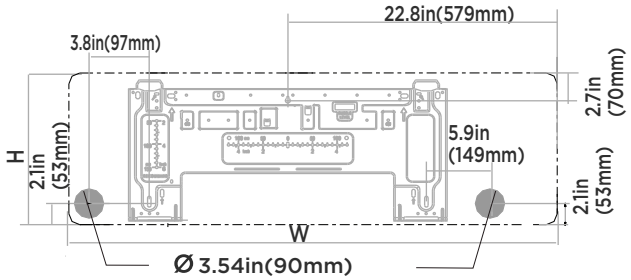

Indoor unit dimensions(WxH):
42.6in(1082mm)x13.3(338mm)

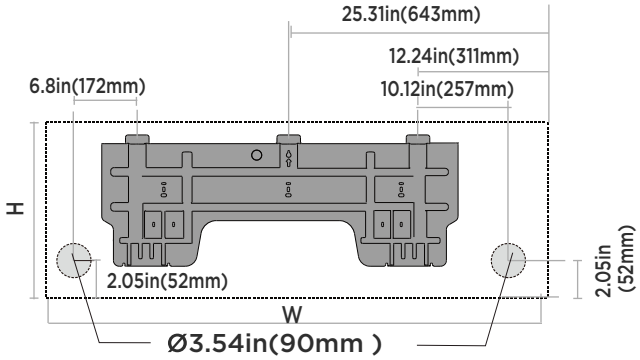

Indoor unit dimensions(WxH):
49.57in(1259mm)x14.25in(362mm)

NOTE: The wall hole size

The size of the wall hole is determined by the connecting pipes. When the pipe size of the gas side is Ø5/8in(Ø16mm) or more, the wall hole should be Ø3.54in(Ø90mm). When the pipe size of gas side is less than Ø 5/8in(Ø16mm), the wall hole should be Ø2.5in(Ø65mm).

Drill wall hole

⚠ CAUTION

When drilling the wall hole, make sure to avoid wires, plumbing, and other sensitive components.

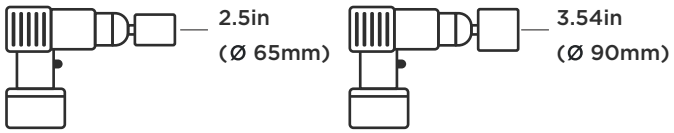

Using a 2.5in(65mm) or 3.54in(90mm) core drill (according to the unit you purchased)

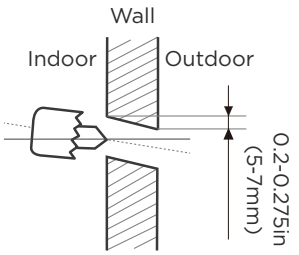

Drill the wall hole

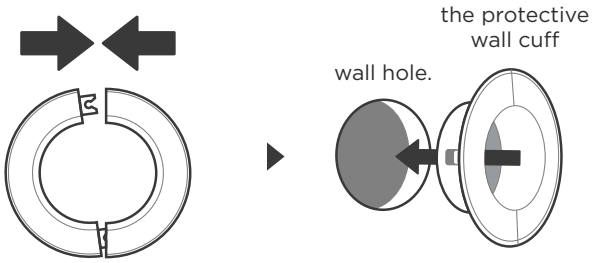

Place the protective wall cuff in the hole.

Step 1:

Using a 2.5in(65mm) or 3.54in(90mm) core drill, drill a hole in the wall. Make sure that the hole is drilled at a slight downward angle, so that the outdoor end of the hole is lower than the indoor end by about 0.2-0.275in(5-7mm). This will ensure proper water drainage.

NOTE:
FOR CONCRETE OR BRICK WALLS

If the wall is made of brick, concrete, or similar material, drill 0.2in-diameter(5mm-diameter) holes in the wall and insert the sleeve anchors provided. Then secure the mounting plate to the wall by tightening the screws directly into the clip anchors.

Step 2:

Place the protective wall cuff in the hole. This protects the edges of the hole and will help seal it when you finish the installation process.

3 Install refrigerant pipe & drain hose

NOTE

The refrigerant piping is inside an insulating sleeve attached to the back of the unit. You must prepare the piping before passing it through the hole in the wall.

Prepare refrigerant piping

Step 1:

Based on the position of the wall hole relative to the mounting plate, choose the side from which the piping will exit the unit (when you are facing the back of the unit). You have four options for the exit direction of the piping. The description of the piping angle below for details.

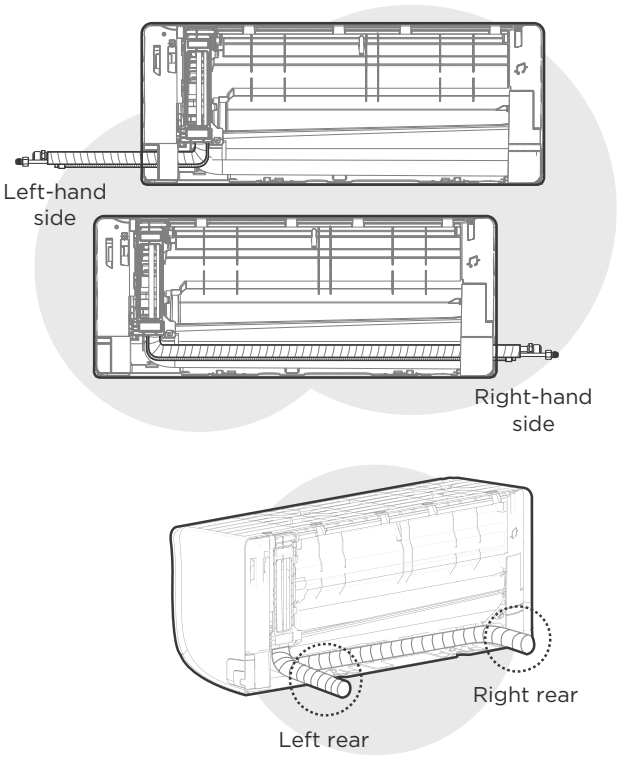

Step 2:

If the wall hole is behind the unit, keep the knock-out panel in place. If the wall hole is to the side of the indoor unit, remove the plastic knock-out panel from that side of the unit. Use scissors or pliers if the plastic panel is too difficult to remove by hand.

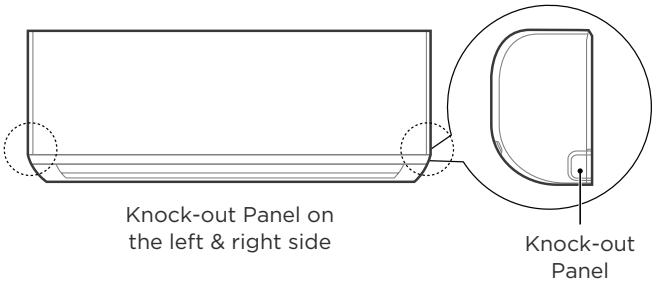

Step 3:

Connect the indoor unit's refrigerant piping to the connective piping that will join the indoor and outdoor units. Refer to the **Refrigerant Piping Connection** section of this manual for detailed instructions.

NOTE: If existing connective piping is already embedded in the wall, proceed directly to the **Connect Drain Hose** step.

⚠ **CAUTION** Be extremely careful not to dent or damage the piping while bending them away from the unit. Any dents in the piping will affect the unit's performance.

Connect drain hose

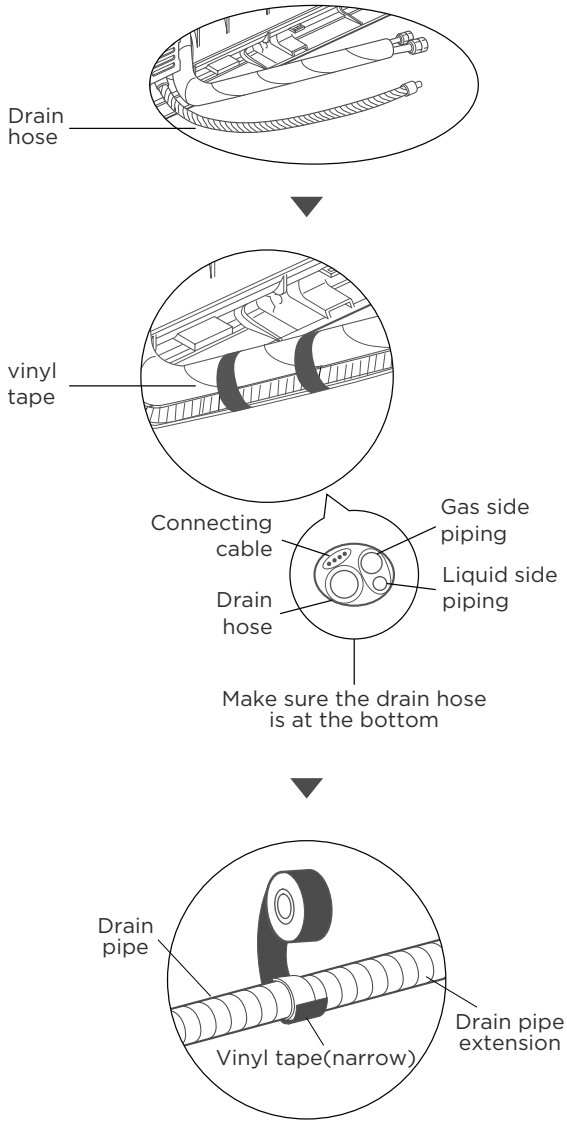

Step 1:

The drain hose can be attached to the left or right side. To ensure proper drainage, attach the drain hose on the same side that your refrigerant piping exits the unit. Attach drain hose extension (purchased separately) to the end of drain hose.

- Wrap the connection point firmly with Teflon tape to ensure a good seal and to prevent leaks.
- For the portion of the drain hose that will remain indoors, wrap it with foam pipe insulation to prevent condensation.
- Remove the air filter and pour a small amount of water into the drain pan to make sure that water flows from the unit smoothly.

NOTE ON DRAIN HOSE PLACEMENT

Make sure to arrange the drain hose according to the following figures.

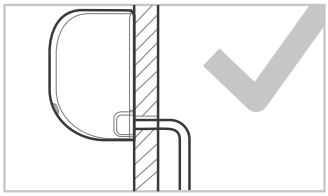

CORRECT

Make sure there are no kinks or dent in drain hose to ensure proper drainage.

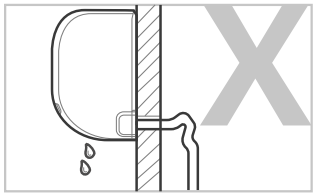

NOT CORRECT

Kinks in the drain hose will create water traps.

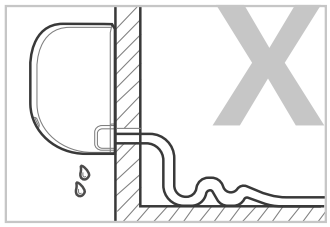

NOT CORRECT

Kinks in the drain hose will create water traps.

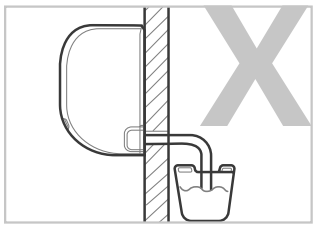

NOT CORRECT

Do not place the end of the drain hose in water or in containers that collect water. This will prevent proper drainage.

⚠ CAUTION

PLUG THE UNUSED DRAIN HOLE

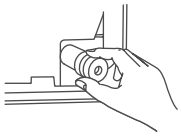

To prevent unwanted leaks you must plug the unused drain hole with the rubber plug provided.

4 Electrical work preparation

⚠ WARNING

- **BEFORE PERFORMING ANY ELECTRICAL WORK, READ THESE REGULATIONS**
- **BEFORE PERFORMING ANY ELECTRICAL OR WIRING WORK, TURN OFF THE MAIN POWER TO THE SYSTEM.**

1. All wiring must comply with local and national electrical codes, regulations and must be installed by a licensed electrician.
2. All electrical connections must be made according to the Electrical Connection Diagram located on the panels of the indoor and outdoor units.
3. If there is a serious safety issue with the power supply, stop work immediately. Explain your reasoning to the client, and refuse to install the unit until the safety issue is properly resolved.
4. If connecting power to fixed wiring, a surge protector and main power switch should be installed.
5. Only connect the unit to an individual branch circuit outlet. Do not connect another appliance to that outlet.
6. Make sure to properly ground the air conditioner.
7. Every wire must be firmly connected. Loose wiring can cause the terminal to overheat, resulting in product malfunction and possible fire.
8. Do not let wires touch or rest against refrigerant tubing, the compressor, or any moving parts within the unit.
9. To avoid getting an electric shock, never touch the electrical components soon after the power supply has been turned off. After turning off the power, always wait 10 minutes or more before you touch the electrical components.

⚠ WARNING

All wiring must be performed strictly in accordance with the wiring diagram located on the back of the Indoor Unit's front panel.

Connect signal and power cables

The signal cable enables communication between the indoor and outdoor units. You must first choose the right cable size before preparing it for connection.

NOTE: Choose the cable type according to the local electrical codes and regulations. Please choose the right cable size according to the Minimum Circuit Ampacity indicated on the nameplate of the unit.

⚠ DO NOT MIX UP LIVE AND NULL WIRES

This is dangerous, and can cause the air conditioning unit to malfunction.

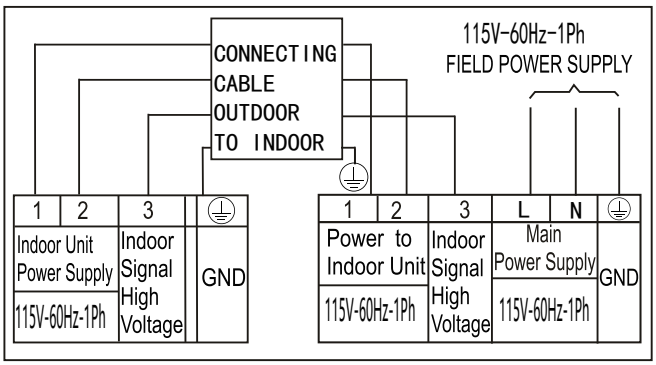

Connection Diagram (115V)

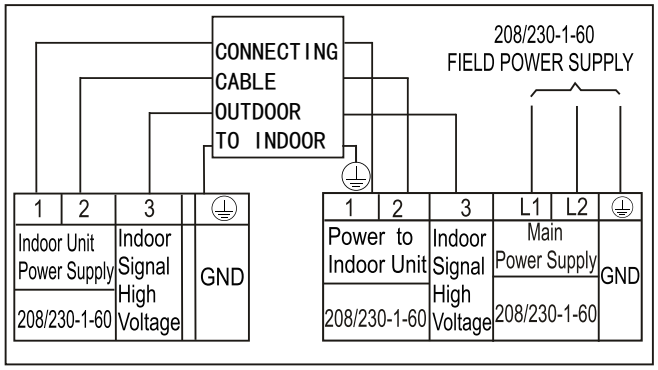

Connection Diagram (208/230V)

1. Open front panel of the indoor unit.
2. Using a screwdriver, open the wire box cover on the right side of the unit. This will reveal the terminal block.
3. Facing the back of the unit, remove the big plastic knock-out panel to create a slot through which the conduit tube can be installed.
   NOTE: For the units with five-core cable, remove the middle small plastic knock-out panel to create a slot through which the cable can exit.
   Use needle nose pliers if the plastic panel is too difficult to remove by hand
4. As shown in the illustration, insert the wires including the ground wire into the conduit and secure them with lock nut onto the conduit mounting plate.
5. Match wire colors with terminal numbers on indoor and outdoor unit's terminal blocks and firmly screw wires to the corresponding terminals.
6. Connect the ground wires to the corresponding terminals.
7. Pull the wires and check that the wires are securely fixed to the terminal block.

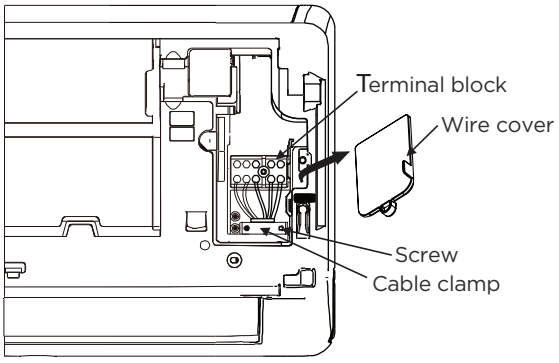

Back view

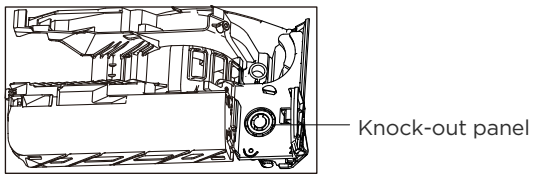

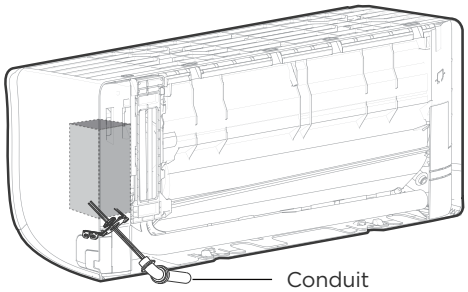

⚠ DO NOT MIX UP LIVE AND NULL WIRES

This is dangerous, and can cause the air conditioning unit to malfunction.

5 Wrap piping & Cables

NOTE

Before passing the piping, and drain hose through the wall hole, you must bundle them together to save space, protect them, and insulate them.

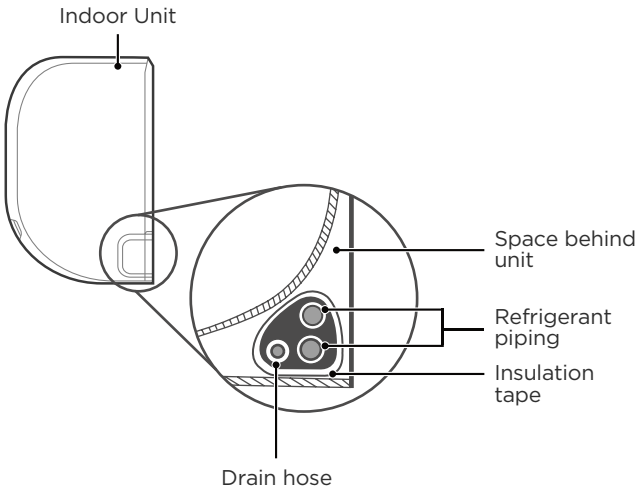

Step 1:

Bundle the drain hose, refrigerant pipes as shown above.

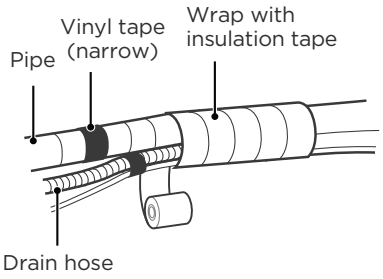

Step 2:

Using adhesive vinyl tape, attach the drain hose to the underside of the refrigerant pipes.

Step 3:

Using insulation tape, wrap the refrigerant pipes, and drain hose tightly together. Double-check that all items are bundled.

DRAIN HOSE MUST BE ON BOTTOM

Make sure that the drain hose is at the bottom of the bundle. Putting the drain hose at the top of the bundle can cause the drain pan to overflow, which can lead to fire or water damage.

DO NOT WRAP ENDS OF PIPING

When wrapping the bundle, keep the ends of the piping unwrapped. You need to access them to test for leaks at the end of the installation process (refer to Electrical Checks and Leak Checks section of this manual).

6 Mount indoor unit

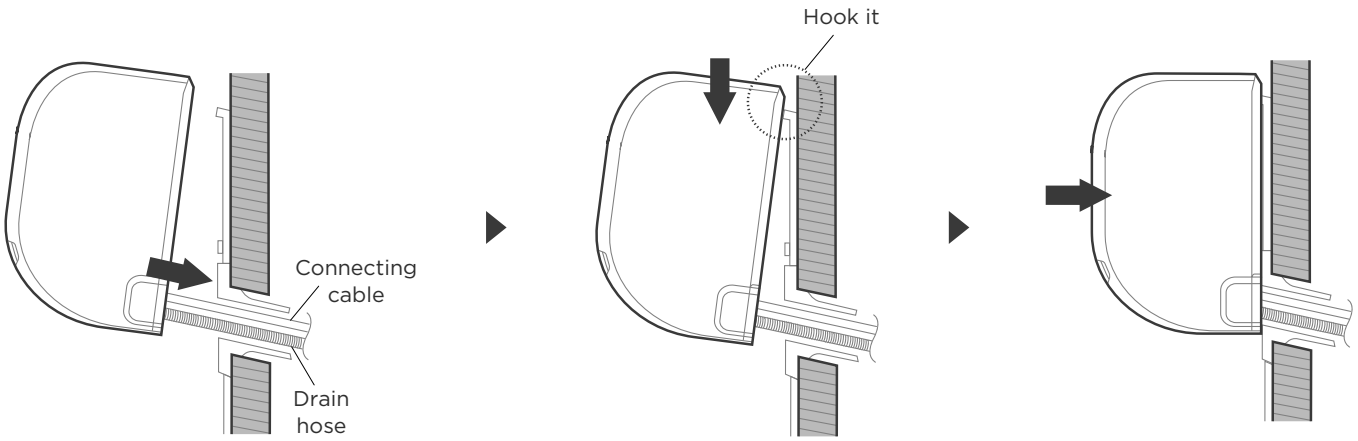

Put pipes in wall hole

Hook it and press down lightly to secure

Check that the unit is firmly mounted

If you installed new connective piping to the outdoor unit, do the following:

- If you have already passed the refrigerant piping through the hole in the wall, proceed to Step 4.
- Otherwise, double-check that the ends of the refrigerant pipes are sealed to prevent dirt or foreign materials from entering the pipes.
- Slowly pass the wrapped bundle of refrigerant pipes, drain hose, and signal wire through the hole in the wall.
- Hook the top of the indoor unit on the upper hook of the mounting plate.
- Check that unit is hooked firmly on mounting by applying slight pressure to the left and right-hand sides of the unit. The unit should not jiggle or shift.
- Using even pressure, push down on the bottom half of the unit. Keep pushing down until the unit snaps onto the hooks along the bottom of the mounting plate.
- Again, check that the unit is firmly mounted by applying slight pressure to the left and the right-hand sides of the unit.

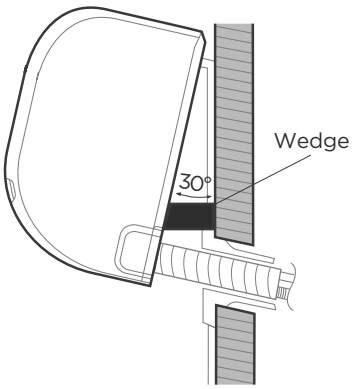

If refrigerant piping is already embedded in the wall, do the following:

- Hook the top of the indoor unit on the upper hook of the mounting plate.
- Use a bracket or wedge to prop up the unit, giving you enough room to connect the refrigerant piping, signal cable, and drain hose.
- Connect drain hose and refrigerant piping (refer to **Refrigerant Piping Connection** section of this manual for instructions).
- Keep pipe connection point exposed to perform the leak test (refer to **Electrical Checks** and **Leak Checks section** of this manual).
- After the leak test, wrap the connection point with insulation tape.
- Remove the bracket or wedge that is propping up the unit.
- Using even pressure, push down on the bottom half of the unit. Keep pushing down until the unit snaps onto the hooks along the bottom of the mounting plate.

NOTE: UNIT IS ADJUSTABLE

Keep in mind that the hooks on the mounting plate are smaller than the holes on the back of the unit. If you find that you don't have ample room to connect embedded pipes to the indoor unit, the unit can be adjusted left or right by about 30-50mm (1.18-1.96in), depending on the model.

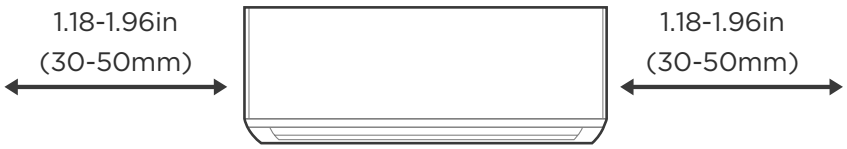

Move to left or right

WARNING

Personal Injury Hazard. For units that use the plastic pipe connectors pictured below, coils are shipped with nitrogen gas at high pressure. The following steps must be followed. Failure to depressurize the coil before removing the plastic connectors can result in a risk of injury. Use appropriate tools, wear personal protective equipment (PPE), and follow these instructions to prevent injury.

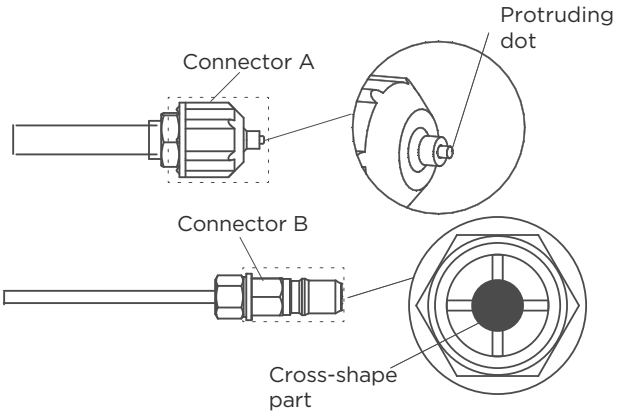

1. Wear gloves and safety goggles when depressurizing the coil. Make sure no one is directly in front of Connectors A and B.
2. Depress the cross-shaped valve on Connector B with a tool until the protruding dot on Connector A fully retracts and gas is no longer heard venting from the tube.
3. Carefully remove both plastic connectors from the coil. Proceed with the steps for connecting the refrigerant tubes to the coil.

Install Your Outdoor Unit

1 Select installation location

NOTE: PRIOR TO INSTALLATION

Before installing the outdoor unit, you must choose an appropriate location. The following are standards that will help you choose an appropriate location for the unit.

Proper installation locations meet the following standards:

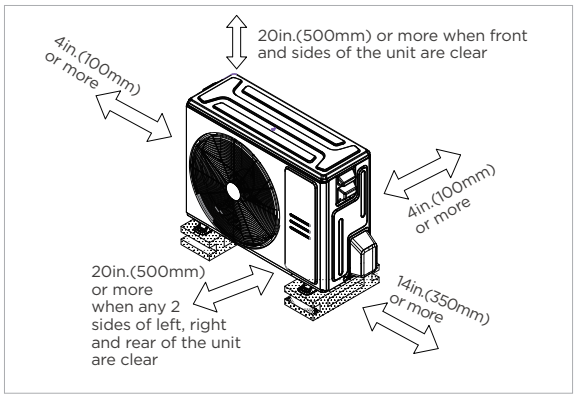

☑ Meets all spatial requirements shown in Installation Space Requirements above.



☑ Good air circulation and ventilation.



☑ Firm and solid—the location can support the unit and will not vibrate.



☑ Noise from the unit will not disturb other people.



☑ Protected from prolonged periods of direct sunlight or rain.

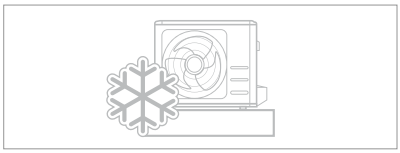

☑ Where snowfall is anticipated, take appropriate measures to prevent ice buildup and coil damage.

NOTE Install the unit by following local codes and regulations, there may be differ slightly between different regions.

⚠ CAUTION:

SPECIAL CONSIDERATIONS FOR EXTREME WEATHER

If the unit is exposed to heavy wind:

Install unit so that air outlet fan is at a 90° angle to the direction of the wind. If needed, build a barrier in front of the unit to protect it from extremely heavy winds. See Figures below.

If the unit is frequently exposed to heavy rain or snow:

Build a shelter above the unit to protect it from the rain or snow. Be careful not to obstruct air flow around the unit.

If the unit is frequently exposed to salty air(seaside):

Use outdoor unit that is specially designed to resist corrosion.

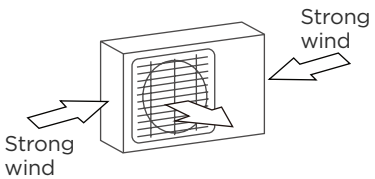

90° angle to the direction of the wind

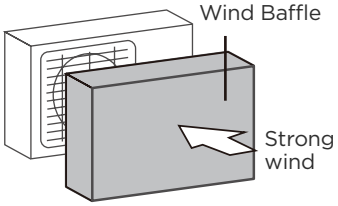

Build a wind Baffle to protect the unit

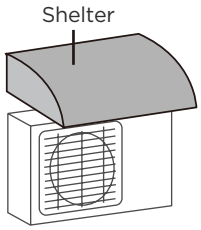

Build a shelter to protect the unit

DO NOT install unit in the following locations:

- ⊘ Near an obstacle that will block air inlets and outlets.
- ⊘ Near a public street, crowded areas, or where noise from the unit will disturb others.
- ⊘ Near animals or plants that will be harmed by hot air discharge.
- ⊘ Near any source of combustible gas.
- ⊘ In a location that is exposed to large amounts of dust
- ⊘ In a location exposed to an excessive amount of salty air.

2 Install drain joint

NOTE: PRIOR TO INSTALLATION

Before bolting the outdoor unit in place, you must install the drain joint at the bottom of the unit. For the units with base pan built-in with multiple holes for proper draining during defrost, the drain joint is no need to be installed.

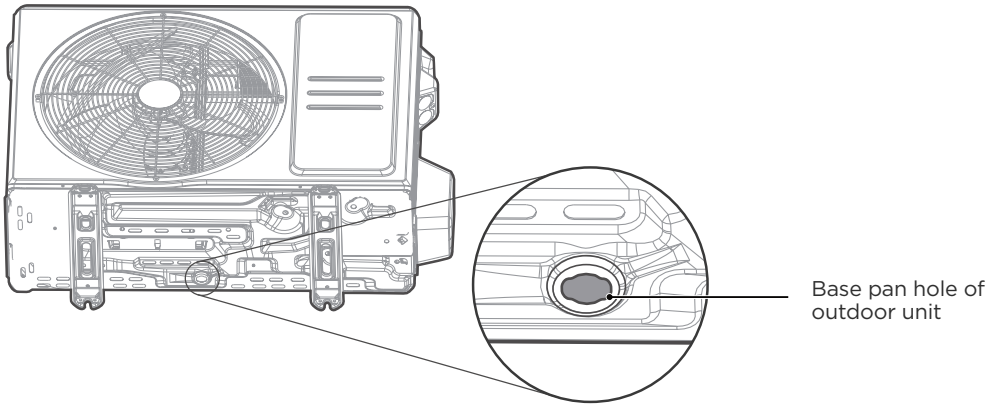

Step 1:

Find out the base pan hole of outdoor unit.

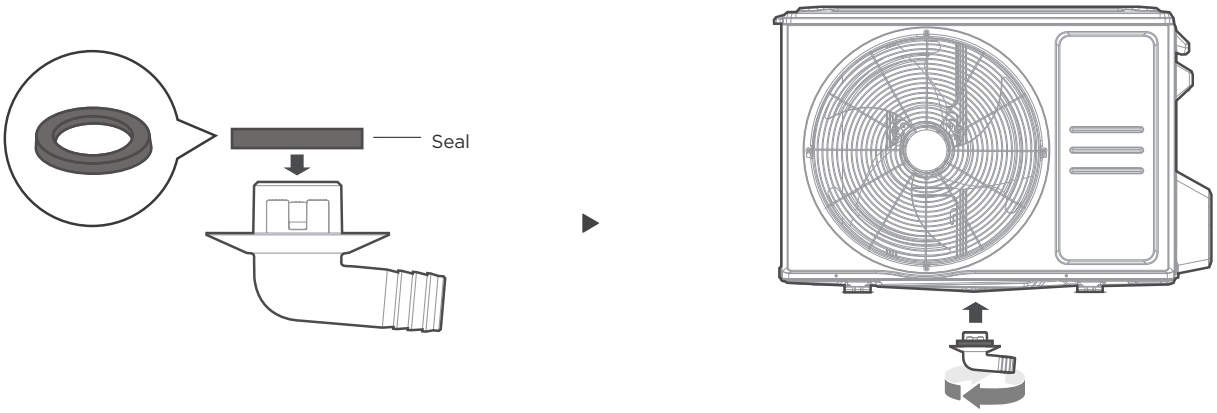

Step 2:

- Fit the rubber seal on the end of the drain joint that will connect to the outdoor unit.
- Insert the drain joint into the hole in the base pan of the unit. The drain joint will click in place.
- Connect a drain hose extension (not included) to the drain joint to redirect water from the unit during heating mode.

NOTE: IN COLD CLIMATES

In cold climates, make sure that the drain hose is as vertical as possible to ensure swift water drainage. If water drains too slowly, it can freeze in the hose and flood the unit.

3 Anchor Outdoor Unit

⚠ WARNING

WHEN DRILLING INTO CONCRETE, EYE PROTECTION IS RECOMMENDED AT ALL TIME.

- The outdoor unit can be anchored to the ground or to a wall-mounted bracket with bolt(M10). Prepare the installation base of the unit according to the dimensions below.
- The following is a list of different outdoor unit sizes and the distance between their mounting feet. Prepare the installation base of the unit according to the dimensions below.

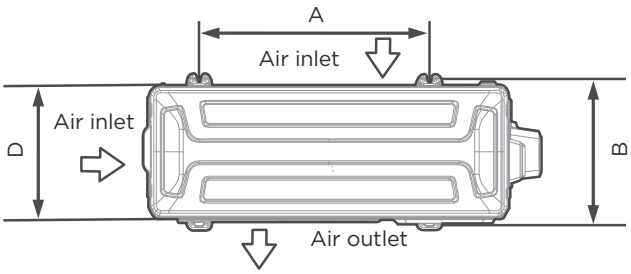

Top view

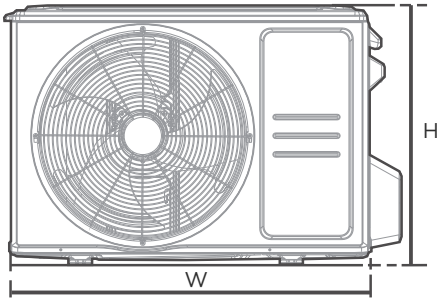

Front view

Outdoor Unit Dimensions W x H x D	Mounting Dimensions	
	Distance A	Distance B
30.1inx 21.8inx 11.9in(765mmx555mmx303mm)	17.8in(452mm)	11.3in(286mm)
31.7inx 21.8inx 12.9in(805mmx554mmx330mm)	20.1in(511mm)	12.5in(317mm)
35.0inx 26.5inx 13.5in(890mmx673mmx342mm)	26.1in(663mm)	13.9in(354mm)
37.2inx 31.9inx 16.1in(946mmx810mmx410mm)	26.5in(673mm)	15.9in(403mm)

If you will install the unit on the ground or on a concrete mounting platform, do the following:

- Mark the positions for four expansion bolts based on dimensions chart.
- Pre-drill holes for expansion bolts.
- Place a nut on the end of each expansion bolt.
- Hammer expansion bolts into the pre-drilled holes.
- Remove the nuts from expansion bolts, and place outdoor unit on bolts.
- Put washer on each expansion bolt, the replace the nuts.
- Using a wrench, tighten each nut until snug.

If you will install the unit on a wall-mounted bracket, do the following:

- Mark the position of bracket holes based on dimensions chart.
- Pre-drill the holes for the expansion bolts.
- Place a washer and nut on the end of each expansion bolt.
- Thread expansion bolts through holes in mounting brackets, put mounting brackets in position, and hammer expansion bolts into the wall.
- Check that the mounting brackets are level.
- Carefully lift unit and place its mounting feet on brackets.
- Bolt the unit firmly to the brackets.
- If allowed, install the unit with rubber gaskets to reduce vibrations and noise.

⚠ CAUTION

Make sure that the wall is made of solid brick, concrete, or of similarly strong material.
The wall must be able to support at least four times the weight of the unit.

4 Connect signal and power cables

⚠ WARNING - Before the Operation

- ALL WIRING WORK MUST BE PERFORMED STRICTLY IN ACCORDANCE WITH THE WIRING DIAGRAM LOCATED INSIDE OF WIRE COVER OF THE OUTDOOR UNIT.
- BEFORE PERFORMING ANY ELECTRICAL OR WIRING WORK, TURN OFF THE MAIN POWER TO THE SYSTEM.

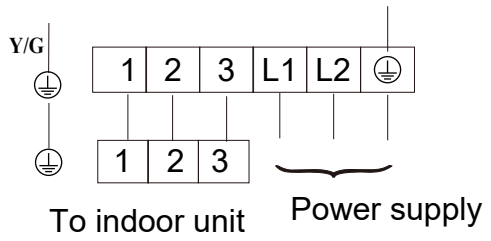

For 208/230V models

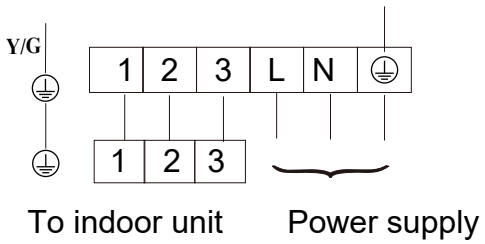

For 115V models

The outside unit's terminal block is protected by an electrical wiring cover on the side of the unit. A comprehensive wiring diagram is printed on the inside of the wiring cover.

- Remove the wire cover from the unit by loosening the 3 screws.
- Dismount caps on the conduit panel.
- Temporarily mount the conduit tubes (not included) on the conduit panel.
- Properly connect both the power supply and low voltage lines to the corresponding terminals on the terminal block.
- Ground the unit in accordance with local codes.
- Be sure to size each wire allowing several inches longer than the required length for wiring.
- Use lock nuts to secure the conduit tubes.

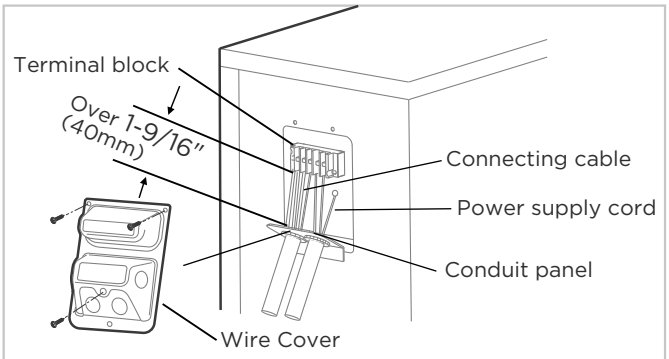

Please select the appropriate through-hole according to the diameter of the wire.

How to properly connect the wire lines.

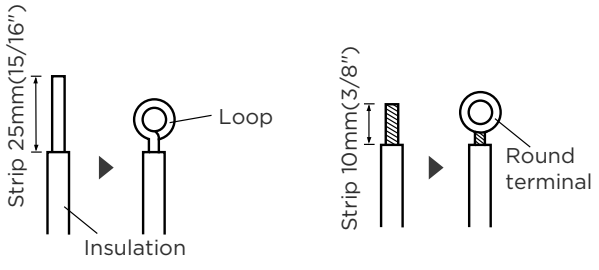

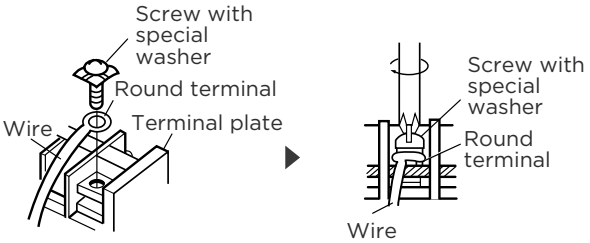

Step 1:

The treatment about the end of the wire.

Step 2:

connecting the line to the corresponding terminals on the terminal block.

Refrigerant Piping Connection

1 Piping Connection Precautions

⚠ WARNING

WHEN CONNECTING REFRIGERANT PIPING, **DO NOT** LET SUBSTANCES OR GASES OTHER THAN THE SPECIFIED REFRIGERANT ENTER THE UNIT. THE PRESENCE OF OTHER GASES OR SUBSTANCES WILL LOWER THE UNIT'S CAPACITY, AND CAN CAUSE ABNORMALLY HIGH PRESSURE IN THE REFRIGERATION CYCLE. THIS CAN CAUSE EXPLOSION AND INJURY.

Note on Pipe Length

The length of refrigerant piping will affect the performance and energy efficiency of the unit. Nominal efficiency is tested on units with a pipe length of 25ft(7.5m). A minimum pipe run of 9.84ft(3m) is required to minimise vibration & excessive noise. Connection Instructions – Refrigerant Piping.

The maximum length and drop height based on models.

Model	Length of piping	Maximum drop height
6K/9K/12K	82ft/25m	49.2ft/15m
18K	98.4ft/30m	65.6ft/20m
24K/30K/33K	164ft/50m	82ft/25m
36K	213ft/65m	98.4ft/30m

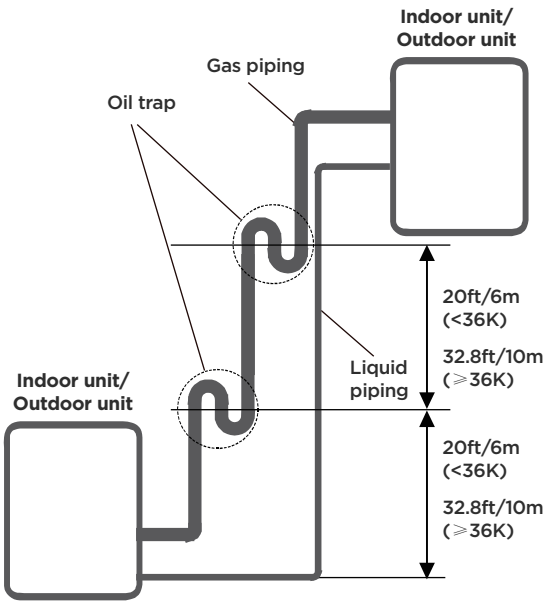

⚠ CAUTION

Oil traps
If oil flows back into the outdoor unit's compressor, this might cause liquid compression or deterioration of oil return. Oil traps in the rising gas piping can prevent this.
An oil trap should be installed every 20ft(6m) of vertical suction line riser (＜36k). An oil trap should be installed every 32.8ft(10m) of vertical suction line riser (⩾36k).

Connection Instructions – Refrigerant Piping

Step 1: Cut pipes

When preparing refrigerant pipes, take extra care to cut and flare them properly. This will ensure efficient operation and minimize the need for future maintenance.

- Measure the distance between the indoor and outdoor units.
- Using a pipe cutter, cut the pipe a little longer than the measured distance.
- Make sure that the pipe is cut at a perfect 90° angle.

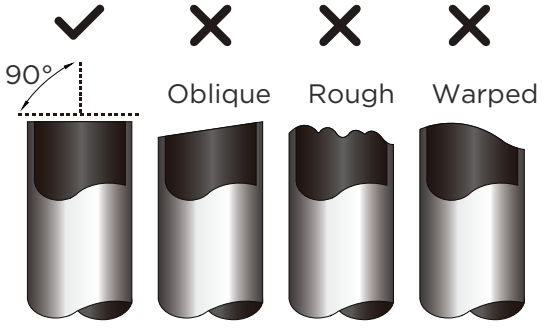

⊘ DO NOT DEFORM PIPE WHILE CUTTING

Be extra careful not to damage, dent, or deform the pipe while cutting. This will drastically reduce the heating efficiency of the unit.

⚠ CAUTION

MUST BE CHECK OVER THE END OF THE PIPE FOR CRACKS AND EVEN FLARING. ENSURE THE PIPE IS SEALED.

Step 2: Remove burrs

Burrs can affect the air-tight seal of refrigerant piping connection. They must be completely removed.

- Hold the pipe at a downward angle to prevent burrs from falling into the pipe.
- Using a reamer or deburring tool, remove all burrs from the cut section of the pipe.

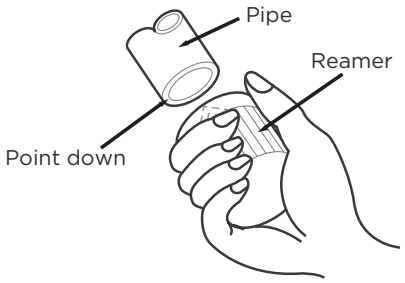

Step 3: Flare pipe ends

Proper flaring is essential to achieve an airtight seal.

- After removing burrs from cut pipe, seal the ends with PVC tape to prevent foreign materials from entering the pipe.
- Sheath the pipe with insulating material.
- Place flare nuts on both ends of pipe. Make sure they are facing in the right direction, because you can't put them on or change their direction after flaring.

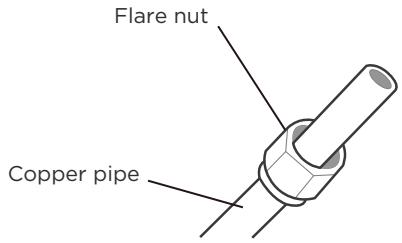

- Remove PVC tape from ends of pipe when ready to perform flaring work.
- Clamp flare form on the end of the pipe. The end of the pipe must extend beyond the edge of the flare form in accordance with the dimensions shown in the table below.

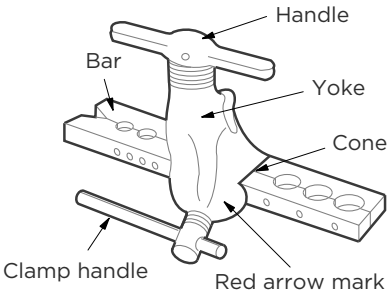

PIPING EXTENSION BEYOND FLARE FORM

Outer Diameter of Pipe	A	
	Min.	Max.
Ø 1/4in (Ø 6.35mm)	0.0275in(0.7mm)	0.05in(1.3mm)
Ø 3/8in (Ø 9.52mm)	0.04in(1.0mm)	0.063in(1.6mm)
Ø1/2in (Ø12.7mm)	0.04in(1.0mm)	0.07in(1.8mm)
Ø 5/8in (Ø16mm)	0.078in(2.0mm)	0.086in(2.2mm)
Ø 3/4in (Ø 19mm)	0.078in(2.0mm)	0.094in(2.4mm)

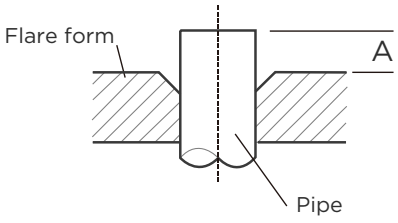

- Place flaring tool onto the form.
- Turn the handle of the flaring tool clockwise until the pipe is fully flared.
- Remove the flaring tool and flare form, then inspect the end of the pipe for cracks and even flaring.

2 Refer to Torque Requirement to connect pipes

⚠ CAUTION

WHEN CONNECTING REFRIGERANT PIPES, BE CAREFUL NOT TO USE EXCESSIVE TORQUE OR TO DEFORM THE PIPING IN ANY WAY. YOU SHOULD FIRST CONNECT THE LOW-PRESSURE PIPE, THEN THE HIGH-PRESSURE PIPE.

MINIMUM BEND RADIUS

When bending connective refrigerant piping, the minimum bending radius is 10cm.

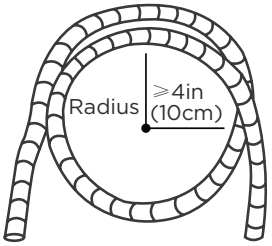

Instructions for Connecting Piping to Indoor Unit

Step 1:

- Align the center of the two pipes that you will connect.

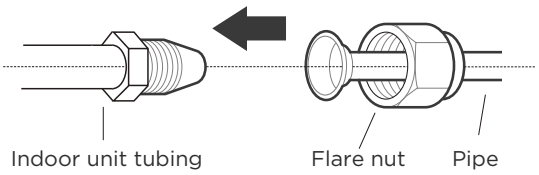

Step 2:

- Tighten the flare nut as tightly as possible by hand.
- Using a spanner, grip the nut on the unit tubing.
- While firmly gripping the nut on the unit tubing, use a torque wrench to tighten the flare nut according to the torque values in the Torque Requirements table below. Loosen the flaring nut slightly, then tighten again.

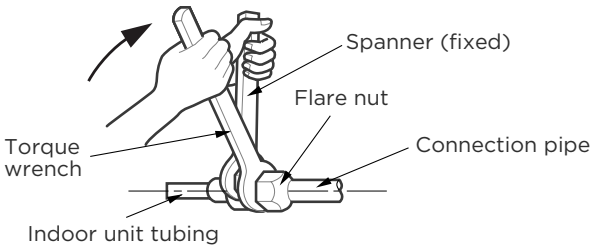

TORQUE REQUIREMENTS

Outer Diameter of Pipe	Tightening Torque	Flare dimension(B)	Flare shape
Ø 1/4in (Ø 6.35mm)	18~20N·m (180~200kgf·cm)	0.33~0.34in (8.4~8.7mm)	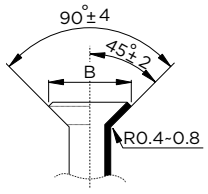
Ø 3/8in (Ø 9.52mm)	32~39N·m (320~390kgf·cm)	0.52~0.53in (13.2~13.5mm)	
Ø1/2in (Ø 12.7mm)	49~59N·m (490~590kgf·cm)	0.64~0.65in (16.2~16.5mm)	
Ø 5/8in (Ø16mm)	57~71N·m (570~710kgf·cm)	0.76~0.78in (19.2~19.7mm)	
Ø 3/4in (Ø19mm)	67~101N·m (670~1010kgf·cm)	0.91~0.93in (23.2~23.7mm)	

⊘ DO NOT USE EXCESSIVE TORQUE

Excessive force can break the nut or damage the refrigerant piping. You must not exceed torque requirements shown in the table above.

3 Connecting Piping to Outdoor Unit

NOTE

This section still needs to be operated according to the **TORQUE REQUIREMENTS** chart on the previous page.

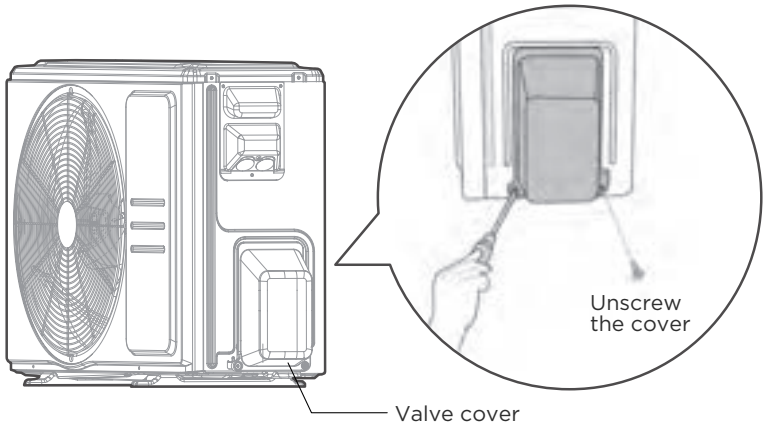

1. Unscrew the cover from the packed valve on the side of the outdoor unit.

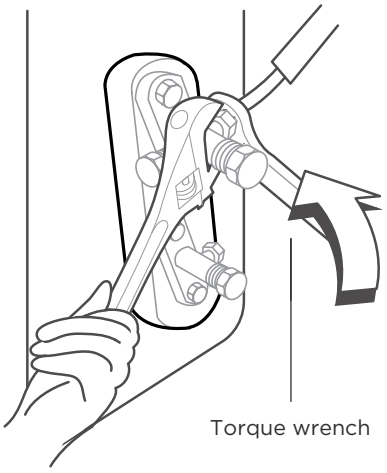

2. Remove protective caps from ends of valves.
3. Align flared pipe end with each valve, and tighten the flare nut as tightly as possible by hand.
4. Using a spanner, grip the body of the valve. **Do not** grip the nut that seals the service valve.

USE SPANNER TO GRIP MAIN BODY OF VALVE

Torque from tightening the flare nut can snap off other parts of valve.

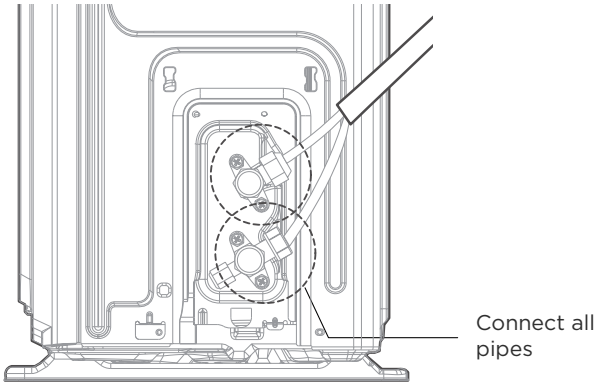

5. While firmly gripping the body of the valve, use a torque wrench to tighten the flare nut according to the correct torque values.
6. Loosen the flaring nut slightly, then tighten again.
7. Repeat Steps 3 to 6 for the remaining pipe.

Air Evacuation

NOTE: PREPARATIONS AND PRECAUTIONS

Air and foreign matter in the refrigerant circuit can cause abnormal rises in pressure, which can damage the air conditioner, reduce its efficiency, and cause injury. Ensure to evacuate the air inside the indoor unit and pipes with vacuum pump. Use a vacuum pump and manifold gauge to evacuate the refrigerant circuit, removing any non-condensable gas and moisture from the system. Evacuation should be performed upon initial installation and when unit is relocated. Incorrect installation due to ignoring of the Instruction will cause serious problem to the machine.

BEFORE PERFORMING EVACUATION

☑ Make sure the connective pipes between the indoor and outdoor units are connected properly.

☑ Check to make sure all wiring is connected properly.

Evacuation Instructions

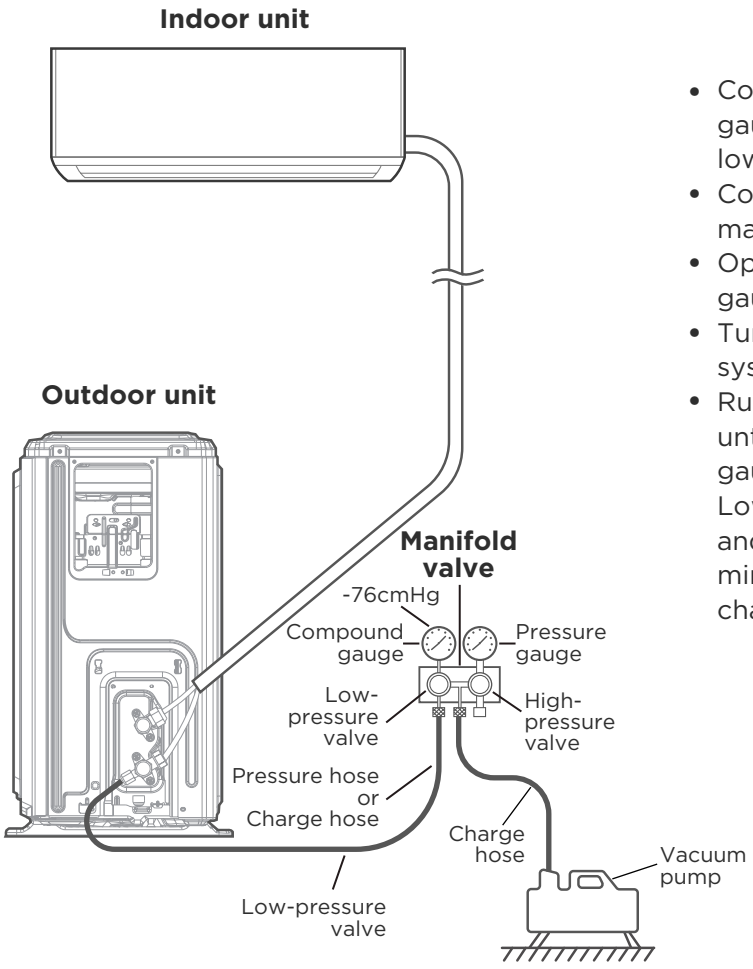

- Connect the charge hose of the manifold gauge to service port on the outdoor unit's low-pressure valve.
- Connect another charge hose from the manifold gauge to the vacuum pump.
- Open the Low-Pressure side of the manifold gauge. Keep the High-Pressure side closed.
- Turn on the vacuum pump to evacuate the system.
- Run the vacuum for at least 15 minutes, or until the vacuum measured using micron gauge to 500 microns. Close the Low-Pressure side of the manifold gauge and turn off the vacuum pump. Wait for 5 minutes, then check that there has been no change in system pressure.

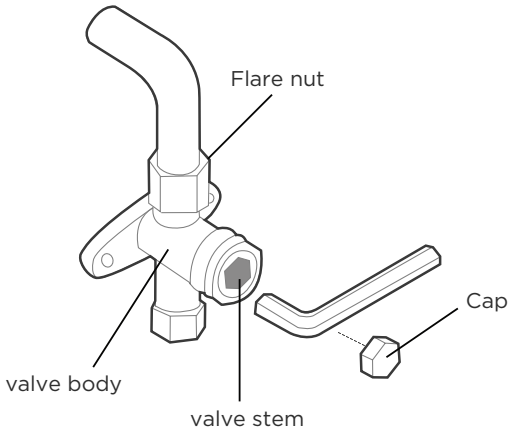

- If there is a change in system pressure, refer to Gas Leak Check section for information on how to check for leaks.
- If there is no change in system pressure, unscrew the cap from the packed valve (high-pressure valve). Insert hexagonal wrench into the packed valve (high-pressure valve) and open the valve by turning the wrench in a 1/4 counterclockwise turn. Listen for gas to exit the system, then close the valve after 5 seconds.
- Watch the Pressure Gauge for one minute to make sure that there is no change in pressure. The Pressure Gauge should read slightly higher than atmospheric pressure.
- Remove the charge hose from the service port.
- Using hexagonal wrench, fully open both the high-pressure and low-pressure valves.
- Tighten valve caps on all three valves (service port, high-pressure, low-pressure) by hand. You may tighten it further using a torque wrench if needed.

OPEN VALVE STEMS GENTLY

Ensure to open all the valves after evacuation. When opening valve stems, turn the hexagonal wrench until it hits against the stopper. Do not try to force the valve to open further.

NOTE ON ADDING REFRIGERANT

Some systems require additional charging depending on pipe lengths. The standard pipe length is 25ft(7.5m). The refrigerant should be charged from the service port on the outdoor unit's low-pressure valve. The additional refrigerant to be charged can be calculated using the following formula:

ADDITIONAL REFRIGERANT PER PIPE LENGTH

Connective Pipe Length (m)	Air Purging Method	Additional Refrigerant	
⩽ Standard pipe length	Vacuum Pump	N/A	
> Standard pipe length	Vacuum Pump	Liquid Side: Ø 1/4in (Ø 6.35mm) R454B: (Pipe length – standard length) x 15g/m (Pipe length – standard length) x 0.16oz/ft	Liquid Side: Ø 3/8in(Ø 9.52mm) R454B: (Pipe length – standard length) x 30g/m (Pipe length – standard length) x 0.32oz/ft

DO NOT MIX REFRIGERANT TYPES.

Make sure the additional amount of refrigerant to be charged is based on the pipe size and length.

Electrical and Gas Leak Checks

⚠ WARNING - RISK OF ELECTRIC SHOCK

ALL WIRING MUST COMPLY WITH LOCAL AND NATIONAL ELECTRICAL CODES, AND MUST BE INSTALLED BY A LICENSED ELECTRICIAN.

BEFORE TEST RUN

Only perform test run after you have completed the following steps:

- Electrical Safety Checks – Confirm that the unit's electrical system is safe and operating properly
- Gas Leak Checks – Check all flare nut connections and confirm that the system is not leaking
- Confirm that gas and liquid (high and low pressure) valves are fully open

Electrical Safety Checks

After installation, confirm that all electrical wiring is installed in accordance with local and national regulations, and according to the Installation Manual.

BEFORE TEST RUN

Check Grounding Work

Measure grounding resistance by visual detection and with grounding resistance tester.

DURING TEST RUN

Check for Electrical Leakage

During the **Test Run**, use an electroprobe and multimeter to perform a comprehensive electrical leakage test.

If electrical leakage is detected, turn off the unit immediately and call a licensed electrician to find and resolve the cause of the leakage.

Note: This may not be required for some locations in North America.

Gas Leak Checks

There are two different methods to check for gas leaks.

Soap and Water Method

Using a soft brush, apply soapy water or liquid detergent to all pipe connection points on the indoor unit and outdoor unit. The presence of bubbles indicates a leak.

Leak Detector Method

If using leak detector, refer to the device's operation manual for proper usage instructions.

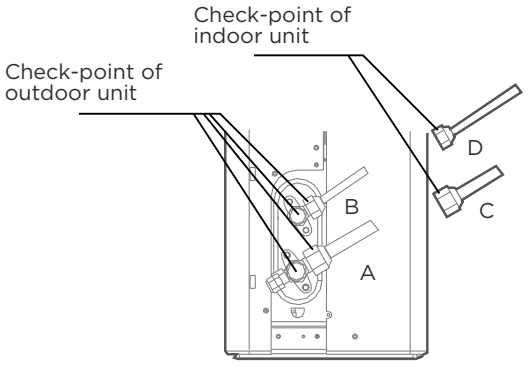

A: Low-pressure stop valve
B: High-pressure stop valve
C& D: Indoor unit flare nuts

AFTER PERFORMING GAS LEAK CHECKS

After confirming that all pipe connection points DO NOT leak, replace the valve cover on the outside unit.

Test Run

Test Run Instructions

You should perform the **Test Run** for at least 30 minutes.

- Connect power to the unit.
- Press the **ON/OFF** button on the remote controller to turn it on.
- Press the **MODE** button to scroll through the following functions, one at a time:
  - COOL–Select lowest possible temperature
  - HEAT–Select highest possible temperature
- Let each function run for 5 minutes, and perform the following checks:

List of Checks to Perform	PASS/FAIL	
No electrical leakage		
Unit is properly grounded		
All electrical terminals properly covered		
Indoor and outdoor units are solidly installed		
All pipe connection points do not leak	Outdoor (2):	Indoor (2):
Water drains properly from drain hose		
All piping is properly insulated		
Unit performs COOL function properly		
Unit performs HEAT function properly		
Indoor unit louvers rotate properly		
Indoor unit responds to remote controller		

DOUBLE-CHECK PIPE CONNECTIONS

During operation, the pressure of the refrigerant circuit will increase. This may reveal leaks that were not present during your initial leak check. Take time during the Test Run to double-check that all refrigerant pipe connection points do not have leaks. Refer to **Gas Leak Check** section for instructions.

- After the Test Run is successfully completed, and you confirm that all checks points in List of Checks to Perform have PASSED, do the following:
  a. Using remote control, return unit to normal operating temperature.
  b. Using insulation tape, wrap the indoor refrigerant pipe connections that you left uncovered during the indoor unit installation process.

IF AMBIENT TEMPERATURE IS BELOW 16°C(60°F)

You can not use the remote controller to turn on the COOL function when the ambient temperature is below 60°F. In this instance, you can use the **MANUAL CONTROL** button to test the COOL function.

- Lift the front panel of the indoor unit. **Note:** If there is a supporting rod located on the left or right side. Please use it to prop up the panel.
- The **MANUAL CONTROL** button is located on the right-hand side of the unit. Press two times to select FORCED COOL mode.
- Perform Test Run as normal.

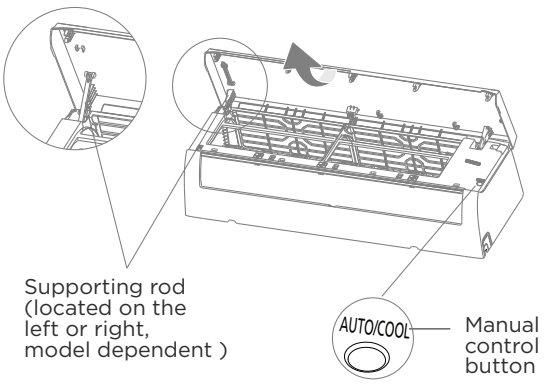

Packing and Unpacking the Unit

Instructions for packing and unpacking the unit:

Unpacking:
Indoor unit:
1. Cut the sealing tape on the carton with a knife, one cut on the left, one cut in the middle and one cut on the right.
2.Use the vice to take out the sealing nails on the top of the carton.
3.Open the carton.
4.Take out the middle support plate if it is included.
5.Take out the accessory package, and take out the connecting wire if it is included.
6.Lift the machine out of the carton and lay it flat.
7.Remove the left and right package foam or the upper and lower packaging foam, untie the packaging bag.

Outdoor Unit
1.Cut the packing belt.
2.Take the unit out of the carton.
3.Remove the foam from the unit.
4.Remove the packaging bag from the unit.

Packing:
Indoor unit:
1.Put the indoor unit into the packing bag.
2.Attach the left and right package foam or the upper and lower packaging foam to the unit.
3.Put the unit into the carton, then put accessory package in.
4.Close the carton and seal it with the tape.
5.Using the packing belt if necessary.

Outdoor unit:
1.Put the outdoor unit into the packing bag.
2.Put the bottom foam into the box.
3.Put the unit into the carton, then put the upper packaging foam on the unit.
4.Close the carton and seal it with the tape.
5.Using the packing belt if necessary.

NOTE: Please keep all packaging items if you may need in the future.

The design and specifications are subject to change without prior notice for product improvement. Consult with the sales agency or manufacturer for details. Any updates to the manual will be uploaded to the service website, please check for the latest version.

CS020UI-AG(R454B)
16122600A13525