ATLAS PRO SERIES

SUBMITTAL DATA SHEET

4-Way Cassette Heat Pump System	
Series Name:	Atlas Pro Series
Indoor Model:	DAP09C2A1
Outdoor Model:	DAP091H2A1

Location:		Approval:	
Engineer:		Date:	
Submitted To:		Construction:	
Submitted By:		Unit No.:	
Reference:		Drawing No.:	



INDOOR SPECIFICATIONS

Air Flow (CFM) (Turbo/H/M/L/Si)	353.2/312.0/264.9/182.5/147.2
Noise Level (dBA) (Turbo/H/M/L/Si)	42.5/40.0/37.5/26.0/24.0
Dimension (W×D×H)	22.44 x 22.44 x 9.65 in.
	570.0 x 570.0 x 245.0 mm
Package (W×D×H)	28.15 x 25.20 x 11.61 in.
	715 x 640 x 295 mm
Net / Gross Weight	35.27 lbs. / 41.89 lbs.
	16 kg / 19 kg

OUTDOOR SPECIFICATIONS

Compressor Type	ROTARY
Compressor Model	KTN110D42UFZ
Refrigerant	R454B
Refrigerant Oil Charge	350 mL
Refrigerant Oil	VG74
Air Flow (CFM) (Max)	1471.5
Noise Level (dBA)	55.0
Dimension (W×D×H)	31.69 x 12.99 x 21.81 in.
	805.0 x 330.0 x 554.0 mm
Package (W×D×H)	36.02 x 14.57 x 24.21 in.
	915 x 370 x 615 mm
Net / Gross Weight	72.75 lbs. / 78.70 lbs.
	33 kg / 33.5 kg

FEATURES

- 360° Airflow
- Integral Condensate Pump
- Refrigerant Leak Detection Sensor
- Humidity Sensor
- 1–100% Fan Speed Control
- Wi-Fi Capability via Wi-Fi Dongle
- Remote On/Off & Alarm Ports
- Wireless Remote Control
- DAP091218P Cassette Panel Required (*Sold Separately*)
- Optional Controls (*Sold Separately*)
  - KJR-120N Wired Programmable Control
  - 24V Mini-Interface for Standard 24V Thermostats

COOLING EFFICIENCY		HEATING EFFICIENCY	
SEER2	22.6	HSPF2-4	12.1
EER2	14.0	COP	4.00

COOLING PERFORMANCE[1] (Btu/hr)

Rated Capacity	9000
Min/Max Capacity	3700~13600
Moisture Removal (L/h)	0.88
Standard Operating Range	-22~122 °F / -30~50 °C

1 Conditions: Indoor: 80°F DB / 67°F WB
Outdoor: 95°F DB / 75°F WB

HEATING PERFORMANCE (Btu/hr)

@ 47°F Rated[1]	10000
@ 47°F Min/Max Capacity[1]	5100~15700
@ 17°F Rated (H32)[2]	9700
@ 5°F Rated / COP (H42)[3]	11000/1.84
@ 5°F Max Capacity[3]	11000
Standard Operating Range	-22~75 °F / -30~24 °C

1 Conditions: Indoor: 70°F DB / 60°F WB
Outdoor: 47°F DB / 43°F WB

2 Conditions: Indoor: 70°F DB / 60°F WB
Outdoor: 17°F DB / 15°F WB

3 Conditions: Indoor: 70°F DB / 60°F WB
Outdoor: 5°F DB / 5°F WB

ELECTRICAL

Power Supply	208/230V, 60Hz, 1Ph
System MCA	15.0
Connection Wiring	14# x 4
System MOCP	15
Compressor RLA	10.4
Outdoor Fan Motor RLA	0.6
Outdoor Fan Motor W	34
Indoor Fan Motor RLA	0.8
Indoor Fan Motor W	45
System Power Input @ Cooling (W)	643 (200 ~ 1150)
System Power Input @ Heating (W)	733 (285 ~1330)

MCA: Min. Circuit Amps (A) MCOP: Max. Over Current Protection (A)
RLA: Rated Load Amps (A) W: Fan Motor Rated Output (W)

PIPING

Throttle Type (Indoor)	N/A
Throttle Type (Outdoor)	EXV
Liquid Size	1/4 in. (6.35mm)
Gas Size	3/8 in. (9.52mm)
Max. Piping Length	82.00 ft. (25m)
Max. Height Difference	49.20 ft. (15m)
Max. Factory Charge Line Set Length	24.6 ft. (7.5m)
Factory Refrigerant Charge	35.27 oz. (1g)
Additional Refrigerant Charge / Ft. Beyond 24.6 ft.	0.16 oz./ft. (15g/m)
Connection Method	Flared

Note: Minimum line set length is 10 feet.

4-WAY CASSETTE HEAT PUMP SYSTEM | **INDOOR MODEL: DAP09C2A1 | OUTDOOR MODEL: DAP091H2A1**

Indoor Unit Dimensions

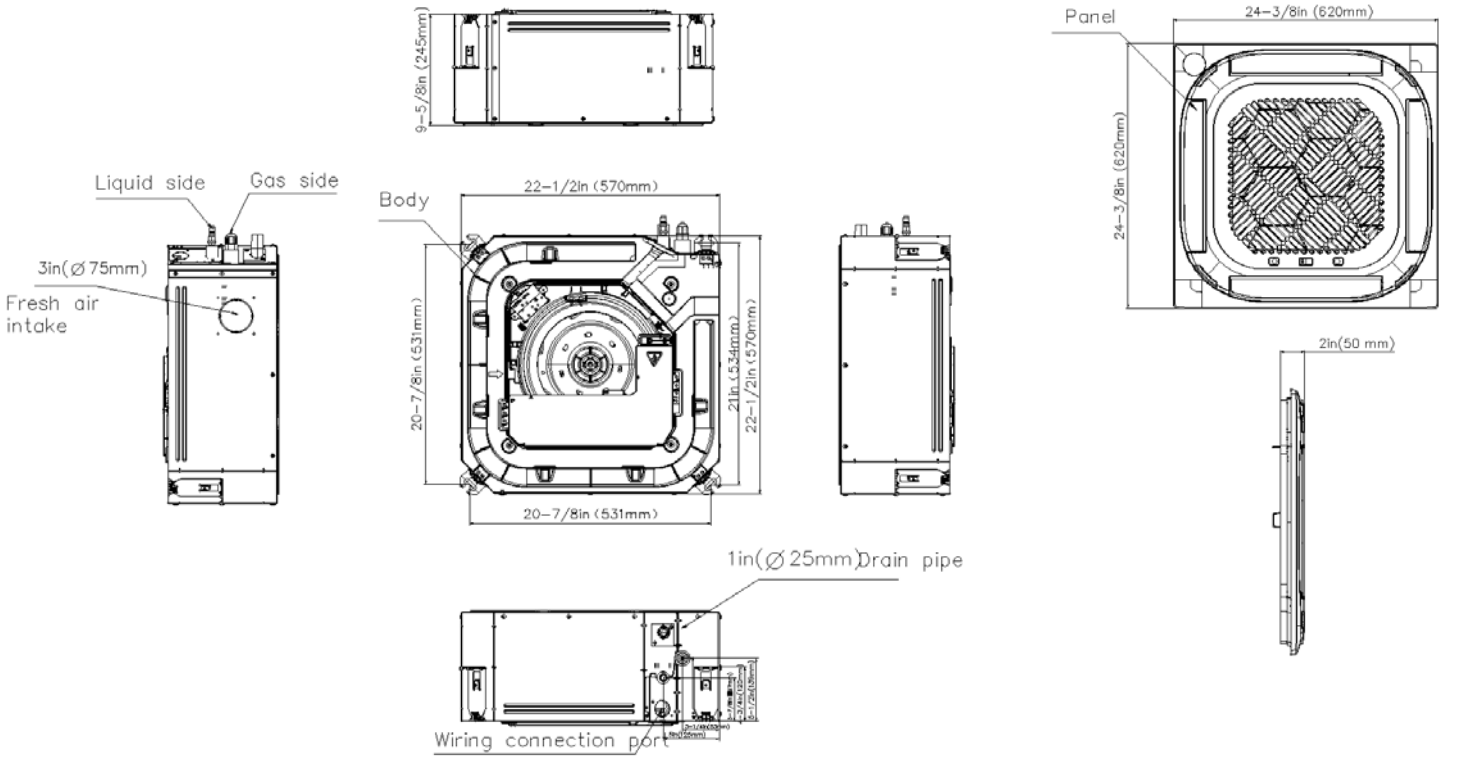

Installation Clearance Requirements

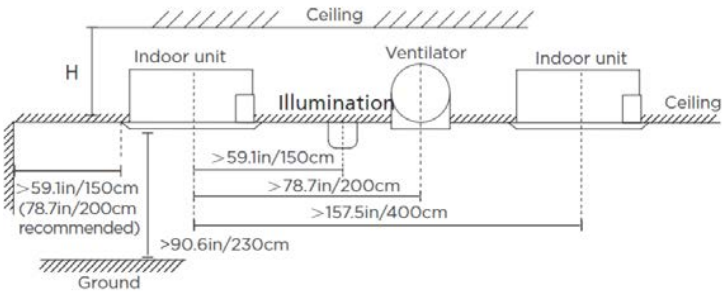

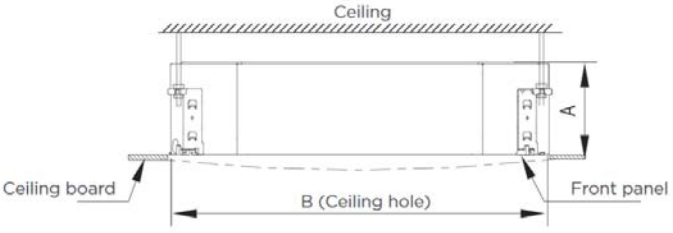

Capacity	H	A	B
9K /12K / 18K	>10.8 in.	9.6 in.	23.6 in.
	275 mm	245 mm	600 mm
24K	9.06 in.	8.03 in.	35.4 in.
	230 mm	205 mm	900 mm

Note: Distance from the ceiling is relative to the height of the indoor unit.

4-WAY CASSETTE HEAT PUMP SYSTEM | **INDOOR MODEL: DAP09C2A1 | OUTDOOR MODEL: DAP091H2A1**

Outdoor Unit Dimensions

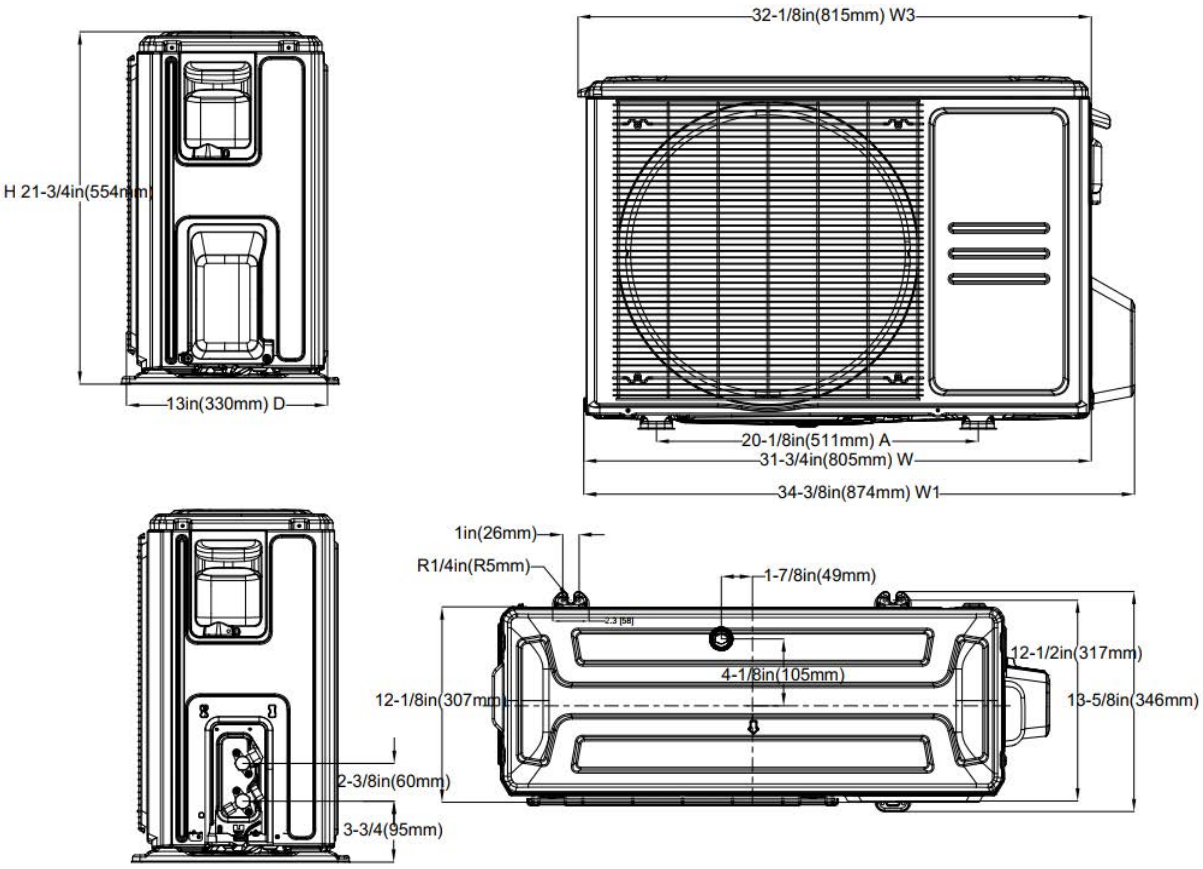

Installation Clearance Requirements

